This is a digital copy of a book that was preserved for generations on library shelves before it was carefully scanned by Google as part of a project to make the world's books discoverable online.

It has survived long enough for the copyright to expire and the book to enter the public domain. A public domain book is one that was never subject to copyright or whose legal copyright term has expired. Whether a book is in the public domain may vary country to country. Public domain books are our gateways to the past, representing a wealth of history, culture and knowledge that's often difficult to discover.

Marks, notations and other marginalia present in the original volume will appear in this file - a reminder of this book's long journey from the publisher to a library and finally to you.

Usage guidelines

Google is proud to partner with libraries to digitize public domain materials and make them widely accessible. Public domain books belong to the public and we are merely their custodians. Nevertheless, this work is expensive, so in order to keep providing this resource, we have taken steps to prevent abuse by commercial parties, including placing technical restrictions on automated querying.

We also ask that you:

+ *Make non-commercial use of the files* We designed Google Book Search for use by individuals, and we request that you use these files for personal, non-commercial purposes.

+ *Refrain from automated querying* Do not send automated queries of any sort to Google's system: If you are conducting research on machine translation, optical character recognition or other areas where access to a large amount of text is helpful, please contact us. We encourage the use of public domain materials for these purposes and may be able to help.

+ *Maintain attribution* The Google "watermark" you see on each file is essential for informing people about this project and helping them find additional materials through Google Book Search. Please do not remove it.

+ *Keep it legal* Whatever your use, remember that you are responsible for ensuring that what you are doing is legal. Do not assume that just because we believe a book is in the public domain for users in the United States, that the work is also in the public domain for users in other countries. Whether a book is still in copyright varies from country to country, and we can't offer guidance on whether any specific use of any specific book is allowed. Please do not assume that a book's appearance in Google Book Search means it can be used in any manner anywhere in the world. Copyright infringement liability can be quite severe.

About Google Book Search

Google's mission is to organize the world's information and to make it universally accessible and useful. Google Book Search helps readers discover the world's books while helping authors and publishers reach new audiences. You can search through the full text of this book on the web at `http://books.google.com/`

PREFACE

The block system is now in use on over 25,000 miles of railroad in America, and it seems likely that this mileage will be steadily increased. Ten years ago, when "American Practice in Block Signaling" was issued, only about one-tenth this number of miles of railroad was worked in this manner; and but few railroad companies appeared to deem block signals necessary. Now, over fifty roads have adopted the system for at least a short length of line, and 27 of them have it in use on over 100 miles each. This fact—that prominent companies all over the country now fully appreciate the value of the space-interval principle, and are putting it in use on their busiest lines—is the most important one to be noted in this revised edition of "American Practice." But the numerous modifications and improvements in electrical and other machinery used in block signaling, which have been made since 1890 are of at least equal interest; and the bulk of the book is, of course, taken up with these.

The matter has been entirely rewritten. Nearly or quite every mechanical or electrical device described in the former work has been improved or superseded, and the illustrations now given are all new. Illuminated semaphores have made no progress and are omitted.

The aim has been to treat the subject from a practical standpoint; to show well-approved practice,

Digitized by Google

rather than ideals or experiments, however desirable or hopeful these may be. History is touched upon only incidentally.

The student of block signaling encounters interlocking at almost every turn, and it is believed that no apology is necessary for adding to this work brief descriptions of the principal types of interlocking machines in use in America. In these descriptions, as in those of the mechanical features of block signaling, the purpose has been to show the methods of working, rather than details of material or construction. Signals and signal machinery have been developed by many different engineers and inventors, and the experience and studies of these men have been extensive and varied; so that the number of devices having merit is large. To adequately describe these, or even to outline the present "state of the art," would require a treatise, and lead beyond the scope of this work.

I have to acknowledge many courtesies from the signal companies of whose machines and signals I have given accounts; from officers of the railroads whose practice is described, and from Messrs. Henry M. Sperry, George W. Blodgett and Sidney Johnson.

Digitized by Google

CONTENTS

THE BLOCK SYSTEM

CHAPTER		PAGE
I.	The Telegraph Block System . . . . . Pennsylvania R. R.	7
II.	The Telegraph Block System—Continued . . Erie R. R.; Chicago, Burlington & Quincy R. R.	25
III.	The Telegraph Block System on Single Track . Chicago, Milwaukee & St. Paul Ry.	36
IV.	Single-Track Blocking—Continued . . . Erie R. R.; Wabash R. R.; Atchison, Topeka & Santa Fe Ry.	51
V.	The Controlled Manual or "Lock-and-Block" System . . . . . New York, New Haven & Hartford R. R.	60
VI.	Controlled Manual—Continued; The Electric Train Staff	97
VII.	Automatic Block Signals—Clock-Work Apparatus; Enclosed Disk Signals	107
VIII.	Automatic Block Signals on Single-Track . . Cincinnati, New Orleans & Texas Pacific Ry.	124
IX.	Electro-Pneumatic Automatic Block Signals . .	129
X.	Automatic Block Signals—The Electric Semaphore	140
XI.	Three-Position Automatic Block Signals . . Pittsburgh, Fort Wayne & Chicago Ry.	146
XII.	Conclusions; Statistics	160

Digitized by Google

INTERLOCKING

CHAPTER		PAGE
XIII.	The Saxby & Farmer Interlocking Machine	173
XIV.	The Johnson Interlocking Machine	189
XV.	The Westinghouse Electro-Pneumatic Machine	194
XVI.	The Low-Pressure Pneumatic Machine	205
XVII.	The Taylor Electric Machine	215

Digitized by Google

THE BLOCK SYSTEM

CHAPTER I

THE TELEGRAPH BLOCK SYSTEM

The terms "block signal" and "block system" are somewhat arbitrary, but their meaning is simple. "Block system" is used to designate any means of maintaining a fixed minimum interval of space between two railroad trains traveling in the same direction on the same track. The system was used in England long before it was tried in America; and the practice, with the accompanying development of terminology, was a gradual growth from the early times when a prescribed interval of time was the means used for avoiding rear collisions. The time interval is still in use on roads or parts of roads where trains usually follow one another only at long intervals; and also on many other lines, the managers of which deem the cost of working the block system too great to be justified by their resources.

The simplest method of maintaining a space interval between trains has been designated by the American Railway Association the "Telegraph Block System." The first use of this in America, at least on any extended scale, was on what is now the Pennsylvania railroad, between New York and Philadelphia, and the rules and practice of that road will be first described.

The railroad (double track) is divided into block sec-

Digitized by Google

tions, each section, for brevity, being called a block. These sections vary in length from less than a mile, where trains must be very frequent, to three miles or even longer, where a longer interval of time between

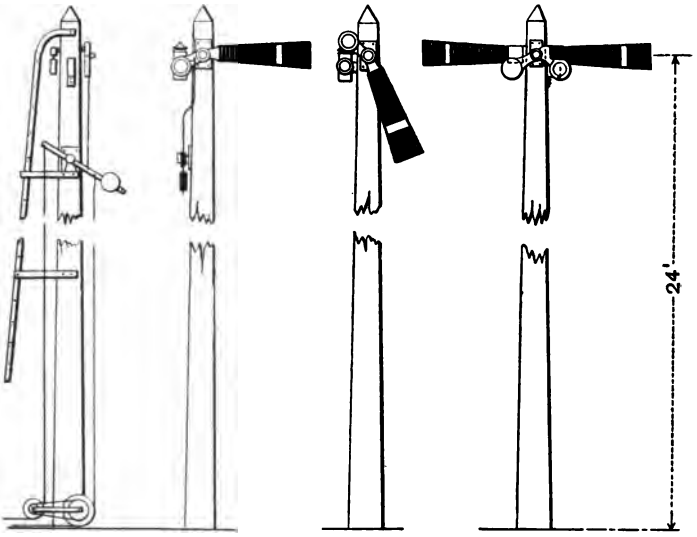

Fig. 2.(a) Fig. 2.(b) Fig. 3.

Semaphore Signals

trains will not cause inconvenient delays. The main line of the Philadelphia division of the Pennsylvania

NOTE—The semaphore signal (Fig. 2) is usually from 20 ft. to 30 ft. high. The arm is of wood and the post usually of wood, although tubular iron posts have lately come into use. On most roads the front of the arm is painted red, but yellow is the color used both for home and distant signals on the Pennsylvania Lines West of Pittsburgh on the Cincinnati, New Orleans & Texas Pacific, and on the Chicago & Alton. The color of a semaphore, however, has no significance to the engineman. Distant signals are usually painted green. White is the most common color for the backs of all signal arms. At night the signal indication is given by a lamp. In Fig. 2b the light shows uncolored or "white;" in Fig. 2a it shows red, the red glass being

Digitized by Google

from Philadelphia westward to Harrisburg, is 105.3 miles long and is divided into 51 block sections. One block, near Leaman Place, is 3.9 miles long and two others, about 20 miles east of Harrisburg, are 4 and 4.3 miles, respectively; but throughout the rest of the division the lengths are much less. For example, from Philadelphia to Glen Loch, 25.3 miles, the block stations are those with which a telegraph call is shown in the table on page 10.

At the entrance to a block, A B, Fig. 1, is a semaphore signal, *a*, by which the signalman or operator

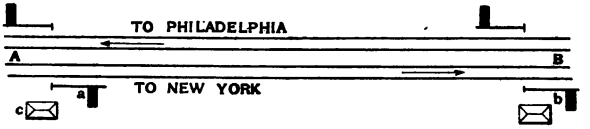

Fig. 1.—Typical Block Section Between New York and Philadelphia

can control passing trains. This semaphore, shown in Fig. 2, is worked by a lever in the cabin, connection being made by an iron rod (gas pipe) or by wires. To stop a train the arm of the semaphore is put in the horizontal position (*a*, Fig. 2); to indicate that the block is clear it is put in the inclined position (*b*, Fig. 2). The Pennsylvania formerly used, in block signaling, a disk, which was shown at or withdrawn from an

brought in front of the lamp by the movement of the signal arm. Another light arrangement is shown in Fig. 34.

It is the rule to set semaphores at the right hand side of the track which they govern, and the arm always extends or hangs at the right side of the post. The counter weight, fixed to the balance lever below the signal, is designed to insure that, in case of breakage of the wire or other connection between the cabin and the signal, the signal arm shall move to the horizontal or "stop" position if it is not already there. The ladder (seen in Fig. 2a) is to enable the attendant to reach the lamp.

Digitized by Google

opening in a box, but the semaphore has been standard now for many years.

On the approach of a train going east (bound for New York) the signalman in cabin *c*, at A, if there is no train on that track between A and B, puts the arm

	Dist. from Philadelphia.	Distance from last block station.	Telegraph call.
Powelton Avenue	1.4	...	....
K Block station	1.9	1.9	K
C R Block station	2.7	0.8	C R
G V Block station	3.2	0.5	G V
52d Street	4.0	0.8	52
O B Block station	4.9	0.9	O B
Overbrook	5.5	...	....
Merion	6.0	1.1	M R
Narberth	6.9	0.9	M Q
Wynnewood	7.5	0.6	W D
Ardmore	8.5	1.0	D J
Haverford	9.2	...	....
Bryn Mawr	10.2	1.7	W H
Rosemont	10.9	...	....
Villa Nova	12.0	1.8	N G
Upton	12.4	...	....
Radnor	13.0	...	....
St. Davids	13.8	1.8	R
Wayne	14.6	...	....
Strafford	15.5	...	....
S Z Block station	15.9	2.1	S Z
Devon	16.5	...	....
Berwyn	17.6	...	....
O V Block station	18.0	2.1	O V
Daylesford	18.6	...	....
Paoli	19.9	1.9	P A
Green Tree	21.0	...	....
Malvern	21.6	...	....
M V Block station	22.1	2.2	M V
Frazer	23.6	1.5	F Z
Frazer	23.9	...	....
Glen Loch	25.3	1.7	G H

of the signal, *a*, in the inclined position, which informs the engineman that the track is clear as far as signal *b* at B. The train proceeds and, after it has passed, the signalman puts his signal back in the stop position. After the train has passed the signal at B, the signalman there notifies A of the fact, and signal *a* may then be lowered whenever needed for another train.

Digitized by Google

At each signal station or cabin the signalman keeps a record of trains in form like that here shown.

This facsimile shows the first few lines of one-half of a signalman's daily report, the other half (showing westward trains) being in similar form. The engrav-

PENNSYLVANIA RAILROAD

DAILY RECORD OF TRAINS

Franklin Park Block Station, April 24, 1899.

Eastward

TRAIN	Eng.	Da		Ki				Cn	REMARKS.
		D	Track	Track	⊘ A	D	Track	D	
70		209	1	1	215	217	1	221	
66		446	1	1	—	450	1	455	
	1561	450	2	2	—	505	2	—	
14		503	1	1	—	507	1	511	
	1060	515	2	2	—	522	2	—	
78		526	1	1	—	531	1	536	
10		601	1	1	—	605	1	608	
	728	602	2	2	—	610	2	—	
6		613	1	1	—	616	1	619	
	1042	625	1	1	—	632	1	640	

ing is reduced somewhat from the actual size, and the column for remarks is wider, in proportion to the other columns, than is here shown. The sheet has a space for recording the state of the weather three times a day, and each operator records on it his name and the hours during which he serves, thus: J. Smith, 12 mid-

Digitized by Google

night to 7 a. m.; P. Jones, 7 a. m. to 7 p. m.; Smith, 7 p. m. to 12 midnight. "Da" is the station west of Franklin Park and "Cn" is the station east. The engine numbers without train numbers denote freight trains not scheduled. The blanks in certain items, as, for example, engine 1,561 at Cn, are due to the fact that at this point the freight tracks, Nos. 2 and 3, are not ordinarily block-signaled. The reader will bear in mind that this is a four-track railroad; for a two-track road the columns headed "Track" would be omitted.

The signalman's cabin *c* is usually a two-story frame

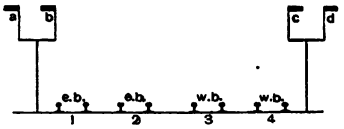

Fig. 4—Looking West

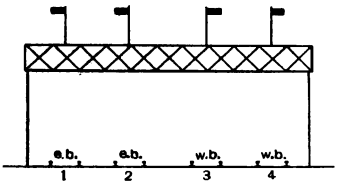

Fig. 5—Looking West

building about 12 ft. x 15 ft., the office being in the second story, where can be had a good view over the tops of cars. Where there are switches the cabin is made larger, to give room for the interlocking frame. At some very small stations the signalman, who also is the only telegraph operator at the station, is in the station building, on the ground floor. The levers for working the signals stand in the middle of the cabin and the connections run out through the basement. Aside from the levers the only apparatus used by the signalman is the common Morse telegraph. He keeps white, red and green flags, and lanterns of the same

Digitized by Google

colors, for use in case the regular apparatus should fail.

Figs. 3, 4, 5, 6, 7 show different arrangements of signals. In Fig. 3 the arms for both eastbound and westbound are on one post, and one lamp placed between the two arms answers for both. If the signal is south of the tracks it must be high enough, so that enginemen passing on the north track can conveniently see it over the top of an eastbound train. In Figs. 4 and 5 there are four tracks, two westbound on the right and two eastbound on the left.

Signals on bracket posts are in some cases made of different heights for different tracks. Thus, if tracks

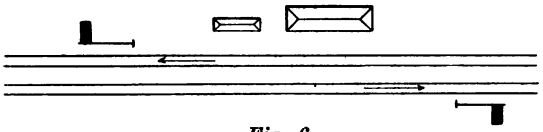

Fig. 6

1 and 4 were used for passenger trains and tracks 2 and 3 for freight trains, the posts of signals *a* and *d* would be made 7 ft. higher than those of signals *b* and *c*.

In Fig. 6 the signals are placed east and west of the station, respectively, so that passenger trains, when stopped by the signal, will be in a convenient position to take and leave passengers. With signals arranged as in Fig. 3 or located as in Fig. 1 (exactly opposite the station), convenience requires a rule permitting passenger trains to run a short distance past a stop signal so as to stop at the platform and thus economize time whenever it is necessary to wait for the block section to be cleared.

Digitized by Google

In Fig. 7 *a* is called the home signal and *b* is the "starting" signal. With this arrangement, an eastbound train which has to wait for a preceding train to pass station C before signal *b* can be lowered to the

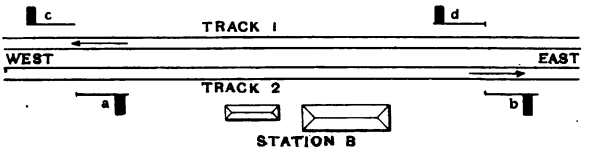

Fig. 7

"all-clear" position, can stand at the station, between signals *a* and *b*; and signal *a* being put in the stop position, the signalman (B) can notify station A to permit a following train to come on as far as *a*.

In Fig. 8, *d* is a distant signal placed 1,000 ft. west of the westernmost stop signal, to be used to repeat the indication of the latter. This is to save the time of fast or heavy trains whenever, on account of fog, snow or smoke, or because there is a curve in the road, the home signal cannot be seen by an approaching engineman until he gets close to it. By being informed a thousand feet away that the home signal is "all clear" the engineman is saved the delay involved in slackening the speed of his train in order to find out in season whether or not it will be safe to pass the home signal. The distant signal is worked by a wire, strung alongside of the track, on short stakes, and its lever is interlocked with that of the home signal, and also that of the starting signal, so that the distant signal cannot be put in the clear position until both the others have

Digitized by Google

been put in that position. And before the home and starting signals can be put back to the horizontal position the distant must be put back, so as to indicate to an approaching engineman that he must expect to find the home signal at "stop."

Distant signals are generally placed not less than 800 ft. nor more than 2,500 ft. from the home signal. Where the grade is descending it is customary to set the signal farther back than on level lines. Where two block stations are near enough together the distant signal of Station B can be put on the same post with the starting signal of station A, the distant arm being placed below the "stop" arm.

Where block sections are long it may frequently be found desirable to move two or more trains, one after the other, nearer together than the length of a block. To provide for this a "permissive" signal is given, virtually suspending the block system for the time. The signalman leaves his signal in its normal or "stop"

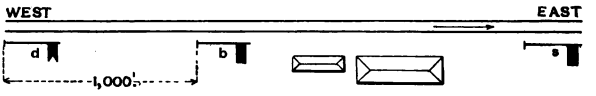

Fig. 8

position and shows to the engineman from the window of the cabin a green flag or (at night) a green light, indicating thereby that the last preceding train has not yet gone out from the farther end of the block. The engineman who receives such a signal must move his train slowly enough to avoid the possibility of running into the preceding train. On straight lines, in

Digitized by Google

clear weather he may be able to maintain the speed at the regular rate, but on curves, in hilly country he may have to reduce it to ten miles an hour, or even less, for the preceding train may have been compelled by some unforeseen circumstance to come to a full stop on a

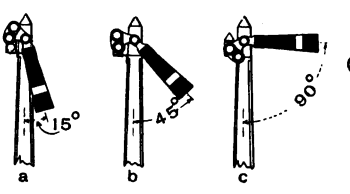

Fig. 9

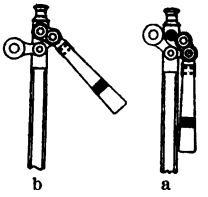

Fig. 10

sharp curve, where the view from the rear is obscured.

Many of the signals on the Pennsylvania are arranged so as to give three indications, as shown in Fig. 9, thus enabling the signalman to give a permissive signal with the semaphore alone. The semaphore casting carries two glasses, a red and a green, the green being for the night indication of the position shown at *b*, Fig. 9.

The position shown at *a*, Fig. 9, indicates all-clear, that at *b* indicates that the preceding train has not cleared the block section.

On the Pennsylvania Lines West of Pittsburgh the three-position semaphore is so designed that in the all-clear position the arm will hang precisely vertical, as in Fig. 10. This arrangement makes a better distinction between positions *a* and *b*, while at the same time it avoids placing the arm exactly in line with the post. If, with the signal shown in Fig. 9, the arm were put

Digitized by Google

in a vertical position, it would practically be hidden, and an approaching engineman would be in doubt whether it had not been accidentally broken off while in the stop position. It is a fundamental principle of all good signaling that the engineman shall receive positive information as to the state of the line.

A three-position signal is worked by rods; with a wire the several positions could not be maintained with sufficient accuracy.

The following paragraphs in small type are the block signal regulations issued by the Pennsylvania Railroad to signalmen, enginemen, conductors and all concerned. The references are to explantory notes following the rules:

BLOCK SIGNALS

201. The section of track between two block stations is termed a "block."

Trains running by block signal rules are to be governed absolutely by the fixed signals at block stations[1] and will not observe Rules Nos. 87, 88 and 89.

202. The block signals are absolute or permissive. For the absolute block they will display red or white; for the permissive block, red, green or white.

Red indicates that the block is not clear, and means stop. White indicates that the block is clear, and is permission to proceed. Green indicates that there are one or more trains on the block, and is permission to proceed, with this knowledge.

Where a semaphore arm is used, a horizontal position means the same as red; nearly vertical, the same as white; and inclined, midway between these positions, the same as green.

203. Night signals must be displayed from one hour before sunset until one hour after sunrise and when, from fog or other cause, day signals cannot be clearly seen.

204. The signal must always display red, excepting when changed to white or green to permit a train to pass. As soon as the whole of a train has passed the signal, and not before, it must be returned to red. When displaying white or green, the signal must be held by the hand and not fastened[2].

Digitized by Google

205. No train must pass a block station while red is displayed, excepting under the circumstances herein provided for.

A train approaching a block station must so run that it can be stopped before the engine passes the signal, if the signal to proceed is not displayed[3].

A train must not be backed after stopping at a block station[4]. If from any cause the engine shall have passed the signal without the signal to proceed having been displayed the conductor will personally direct the engineman to proceed, after the proper signal is displayed.

In the absence of any signal at a block station trains must stop and ascertain the cause.

If a train arrives at a block station where the operator is absent or disabled, or where the signal is not working, and orders cannot be obtained, the train shall proceed as if green were displayed[5]. If there is an operator on duty and he cannot get orders for the train, he must give it written notice of the reason for the proper signal not being displayed.

If the telegraph line fails after a train enters a block, and the block cannot be ascertained to be clear for an approaching train, such train shall be stopped by red and notified by the operator in writing. Green shall then be displayed for the train to proceed. Where the absolute block is used, it shall proceed, after getting such notice, as if green were displayed[6].

206. When a train approaches a block station white will be displayed, if there is no train upon the block ahead.

207. Where the absolute block is used, red must continue to be displayed after a train has entered a block until it has cleared it.

208. Where the permissive block is used, red must continue to be displayed after a passenger train has entered a block until it has cleared it. After any other than a passenger train has entered a block, and has not cleared it, green must be displayed for any following train approaching. If the following train is a passenger train, it must first be stopped by red and notified that there is a train ahead, unless the latter has had time to reach a crossing or siding on the block[7].

209. When a train is required to cross over to the opposite track between block stations, the conductor, before crossing over, must so notify the operator at the block station to be last passed. This operator must notify the operator at the next block station in the direction in which the train is moving, who must display green for any train approaching on the opposite track, until informed that the train that was to cross over has reached one of the block stations. The train must not enter the block until the conductor is informed that the operator at the next block station has been so notified, and Rules Nos. 100, 101 and 102 must be observed[8].

Digitized by Google

210. At starting and junction points trains must not enter on the main track until the signal to proceed is given. This signal must not be given until the train has been protected on any track it is to enter upon or cross. Such protection must be by notice to the block stations in the proper directions and by the use of signals as required by the rules or by fixed distant signals.

211. Operators must promptly report to the next block stations in each direction the movement of trains passing their stations. A train must not be reported as having passed until the rear end has passed at least 100 yards beyond the block signal[9].

212. When a passenger train is stopped by the block signal at a station where it receives or discharges passengers, it may run to the platform, and, if the block signal cannot be seen by the engineman, the conductor will, after the proper signal is displayed, personally direct him to proceed[10].

213. If a train passing a block station has no markers displayed, the operator must notify the operator at the next block station ahead, who must signal the train as per Rule No. 62, and the train must be governed accordingly. Notice must also be given to the block station in the rear, and the intermediate block in that direction must not be considered clear until information is received from the conductor that he has all his train[11].

214. An operator having orders for a train must display a red, or train order, signal in addition to the block signal.

215. Operators will be governed by the following telegraph signals:

"5" Is the track clear?

"No. 1" Track is not clear—hold the train.

"O K 35" Track is clear—let train come on[12].

216. The rules relating to Block Signals do not relieve trainmen from observing all rules in regard to the protection of their trains[13].

NOTES ON THE RULES

(1). Will not observe the time-interval rules. (2). A signal must not be fastened in a position to permit trains to pass, lest the signalman turn his attention to other duties and forget what or how many trains he has permitted to enter the block.

(3). To guard against violations of this rule where there is no distant signal, the 300-ft. leeway, provided

Digitized by Google

for in Rule 211, is prescribed. In some cases this leeway is made 900 ft.

(4). The movement of a train is from one point to another. A train, after passing any given point has surrendered the track at that point to following trains and has no right to it whatever. This principle is fundamental in train movement, though not often mentioned in rules. It is especially important where permissive block-signaling is practiced, as the engineman of train B, closely following train A, may be depending upon the movement of the tail end of train A, on which he constantly keeps his eye, to guide him in the regulation of the speed of his own train.

(5). It is to be borne in mind that these regulations are for a double track railroad. On a single track, with trains liable to come from the other direction, the failure of the telegraph wire or the disablement of the operator would compel a train in such a situation to wait indefinitely, or to proceed only after sending a man ahead with stop signals, the train then following far enough behind him to give room for any opposing train to be stopped. Only in this way can the block system afford full protection from collision on a single track line.

(6). This refers to block sections where, ordinarily, no permissive blocking is authorized.

(7). Ordinarily passenger trains are never stopped as prescribed in Rule 208. The time at which a passenger train is due, say, at station B, is known to the conductor of any preceding inferior train, and he calculates to clear station C before the passenger is due at B. If he cannot do this he does not enter block B C.

Digitized by Google

but puts his train on a side track and waits for the passenger train to go ahead of him. If the passenger train is known to be behind time the train despatcher, who keeps a constant record of all trains and their whereabouts, notifies the conductor of the inferior train so that he can go on ahead of the passenger.

(8). The conductor of a train on track No. 2, moving from B toward C, desiring to cross over to track No. 1, notifies the signalman at B; B informs C, and C cautions trains on track No. 1 moving toward B, according to the rule. Rules 100, 101 and 102 require a

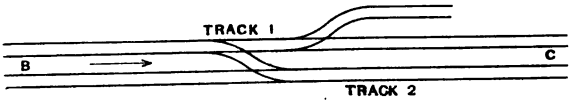

Fig. 11

train crossing over to send out a flagman on track 1 in the direction of C; and prescribe the method of procedure if a freight gets caught at the crossover when superior trains are due from both directions.

Crossover tracks which are near a signal cabin—say within 500 to 1,000 ft.—can be watched by the signalman. At the principal stations on the Pennsylvania the switches of such crossovers, as well as those leading to side tracks, are worked from the signal cabin and their levers are interlocked with those of the signals, so that it is mechanically impossible for the attendant to give a clear signal to a train unless the switches are in the right position. Switches remote from a cabin may be controlled from the cabin either by an electric lock or by making the signalman the sole custodian of

Digitized by Google

the key to the switch. The latter method has not been used to any extent in America; electric locks are used in a few places.

(9). See Note 3, above.

(10). See discussion of diagram, Fig. 6.

(11). Markers are the flags or lights at the rear end of a train. Their absence indicates that the train has broken apart and that a portion of its cars have been left behind. The signal prescribed in Rule 62 informs the trainmen that they have lost a part of their train.

(12). These signals are purely arbitrary. The second one means "No; wait," the numeral "1" being the customary telegraphic signal for "wait."

(13). No. 216 refers to the long-standing rules for the protection of trains from collision when running under the time-interval system. These rules, until recently, were very precise and elaborate, and in many situations would require a flagman to go back half a mile, and very likely delay his own or a following train, when his going back was unnecessary. With fast trains running not more than three minutes apart, as is possible with the block system, but is not allowed with the time interval system (under which the flagging rules have been developed), a flagman may at times find it impossible to carry out his regulations. Moreover, with the knowledge that the block system is designed to make collisions impossible, which flagmen and all concerned learn by observation, all hands come to look upon flagging as unnecessary; and, as a consequence, the enforcement of the rules becomes difficult. The Pennsylvania flagging rule is now that of the standard code of the American Railway Association, which is very brief,

Digitized by Google

leaving large discretion to the conductor, who, of course, is responsible for the efficient performance of duty by the flagman. The rule reads:

99. When a train stops or is delayed under circumstances in which it may be overtaken by another train the flagman must go back immediately with stop signals a sufficient distance to insure full protection. When recalled he may return to his train, first placing two torpedoes on the rail when the conditions require it.

COST OF INSTALLATION AND MAINTENANCE

From what has been said concerning the different arrangements of signals it will be seen that the cost of the apparatus necessary for block signaling will vary according to the extent of the conveniences provided. The simplest semaphore, with connections to the office, can be estimated at $50 to $75. The addition of starting or distant signals would increase the cost nearly in proportion to the increase in the number of signals. Where an additional telegraph wire has to be put up in consequence of the introduction of the block system the cost of wire (iron) in place will be about $25 to $35 a mile, the poles being already in place. Copper wire costs several times as much per pound as iron, but a smaller size can be used, so that the additional cost of a line would be perhaps $20 a mile. The telegraph instruments for an office (one line) will cost about $10. There must be a main battery every five or ten miles, as on a busy road not more than from four to eight offices can use the same wire. A two-story signalman's cabin costs about $500. A cabin not too large to be carried on a platform car—say not over 10 ft. square—can be built in the shops at much smaller cost. But this, of course, can be done only where the

Digitized by Google

road between the shop and the proposed location is sufficiently free from side and overhead obstructions to permit the transportation of the cabin.

With the telegraph block system the principal item of maintenance is the wages of operators and inspectors, to which is to be added the maintenance of buildings, with fuel and lights, where a building is erected especially for this service. At stations where operators have no switches to attend to, and no other work of any kind, they work 12 hours each, daily, seven days in the week. The pay for these men on the Pennsylvania is from $45 to $55 monthly. Where the duties are more complex the pay is higher, and where a considerable number of interlocking switches is operated, the working time for each man is eight hours daily. The men at these important cabins are paid, on the Pennsylvania, from $50 to $70 per month. The duties of the inspectors are light, as far as simple block stations are concerned. Their work is chiefly in connection with the interlocking apparatus of switches and the signals which control them, and the time spent inspecting simple block stations is treated as a secondary matter.

Digitized by Google

CHAPTER II

THE TELEGRAPH BLOCK SYSTEM.—*Continued*

THE WEST SHORE, THE ERIE AND THE BURLINGTON

The most prominent roads which adopted the block system next after the Pennsylvania were the New York Central & Hudson River, the Erie, the Chicago, Burlington & Quincy and the West Shore, the latter now a part of the New York Central. The Central early adopted electric locking apparatus for controlling the operation of the signals in one cabin by apparatus manipulated in another, and its practice will be described in a subsequent chapter.

On the West Shore the practice is substantially the same as that of the Pennsylvania, already described, though, in consequence of the much smaller volume of business, the arrangements are less elaborate. Nearly all the signal offices are in the stations. Permissive signaling is done only by written notice. That is to say, if a train is to enter a block section before the last preceding train has cleared it, the signalman, before permitting it to pass his office, delivers to the conductor and engineman each a notice in form like the following:

WEST SHORE RAILROAD—BLOCK CLEARANCE

A——, 8.10 A. M., Dec. 25, 1899.

To Conductor and Engineman Extra 146:

No. 3 left here at 7.55 A. M. Not clear at B—— at 8.05 A. M.

Jonas Smith, Operator.

A signalman on the West Shore does not record the

Digitized by Google

time of trains at the preceding station; B records the time at B and at C, but not at A.

Where a freight conductor puts his train on a side track to be passed by more than one superior train, and the side track is not within the control of the signalman, the conductor sends word to the block-signal office what and how many trains he intends to wait for, thus guarding against misunderstanding.

The West Shore road was opened from Weehawken to Albany June 9, 1883, and to Buffalo January 1, 1884; and the block system was put in use from the start.

The Erie road (east of Buffalo and Salamanca) began using the block system in 1887. For about 46 miles, near New York (Jersey City to Turners) electrically locked apparatus is used, but on the rest of the road the practice is substantially the same as that which has been described, except that bells, with a brief code, are used, instead of the Morse telegraph with its comprehensive code. Thus the Erie was the first road in this country to establish block stations without the "Morse." The New York Central had several years before that put in use the Sykes apparatus on a few miles of its busy lines close to New York City, but every cabin had the telegraph also. The Erie in adopting bells and bell signals in place of the telegraph made a new departure, the radical difference between its method and that of most other roads being that in an emergency new signalmen could be obtained at shorter notice. The process of learning to send and receive at good speed by the Morse telegraph is very slow. With the bells but a limited code of signals is possible or is attempted; and the code which is in

Digitized by Google

every-day use and must be committed to memory is exceedingly brief, and can be mastered by anyone in a few minutes.

At the present time the greater simplicity of the bell code gives little or no advantage, in the matter of wages, because telegraph operators with considerable experience can generally be hired for the same pay that is required to secure non-telegraphers of the requisite mental equipment and moral character to perform the duties of a signalman.

Throughout the Erie lines the signalman is forbidden to give permissive signals except when authorized by the train despatcher to do so.

The apparatus used in Erie signal cabins is almost as simple as a common electric door bell. Each cabin has two ordinary vibrating bells. The code of signals* is similar in principle to that which has been used for many years in England. The arrangement of the bells, batteries and wires in two adjoining cabins is shown in Fig. 12. The apparatus at the first station is shown at A, and that at the second at B. The bell *a* is that

*The principal clauses of the Erie bell code are as below.

Number of Rings.	
1	Acknowledgment of any signal except as herein provided.
2	Yes.
3	Is block clear? Answer by 2 or 5.
4	Train has entered block.
5	Block not clear.
2-1	No.
2-4	Has train cleared? Answer by 4-2 or 5.
3-3	Train is on siding clear of main track.
3-3-3	Train to you broken in two. Answer by repeating 3-3-3 to sender.
4-2	Train has cleared.
9	Stop train. Has no markers (tail-end signals).

Digitized by Google

on which A receives signals from the next station to the west. E, a bell of larger size, giving a different tone, gives him his signals from the next station to the east (B). At *f* is the transmitting key, having

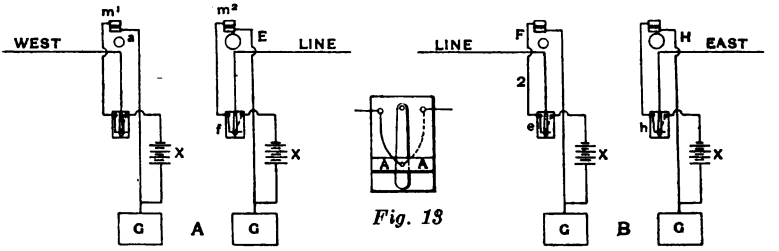

Fig. 13

Fig. 12—Wiring for Block Signal Bell Circuits on Erie Railroad

upper and lower contacts. The battery is indicated by X, and G is the ground.

The transmitting key *f* is shown on a larger scale in Fig. 13, in which A is a cross piece above or outside of the key. The full line shows the connection to the upper contact, against which the key is normally pressed by a strong spring, and the dotted line is the connection to the lower contact.

Referring to Fig. 12, the depression of key *f* rings the bell F at station B, the circuit being from the battery at A through key *f*, the line, upper contact of key *e* and wire 2. The depression of key *e* at B in the same manner rings bell E at A.

Bell H at B gives signals from the next cabin, C.

The cost of fitting up a cabin with the bell apparatus is not materially different from that of equipping with the Morse telegraph.

Digitized by Google

The Erie has the block system on a number of single track lines. On such lines, where there are block stations without passing tracks, the procedure, under the bell code, for blocking opposite trains is as follows: The signalman at B, Fig. 14, receiving word from A that a train is proceeding toward B, at once notifies C that such a train is coming; the signalman at C then takes care that no train leaves C going toward B until the train just signaled from A arrives at C. This is in addition to the regular bell signaling for making sure that each block (A to B and B to C) is clear, before any train is permitted to enter that block.

The arrangement of the signals at a typical block station of the Erie is shown in Fig. 15. The middle track, s s v v, is a siding to be used by freight trains which have to be set off to be passed by passenger trains. The switches, x x and z z, are worked by levers in the cabin, each pair of switches by a single lever. The levers are suitably interlocked with the signals, so that a switch cannot be moved until the signals

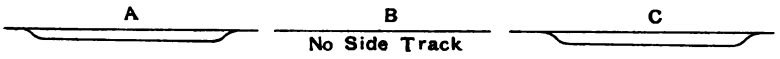

Fig. 14

which regulate the approach of trains to it are the "stop" position. The signals are all worked by levers in the cabin. The switches, *e* at the outgoing ends of the turnouts are worked by hand, not being connected to the machine in the cabin, but they each have an electric lock, connected by wire with the cabin, and they are thus under the control of the signalman. In con-

Digitized by Google

nection with each of these switches is a derailing switch, *w*, worked by the same lever. When the switch is set for the main track the derailing switch is set to throw off from the rails any car or train which may by accident or otherwise be moved on the turnout toward the main track.

The arrangements are precisely alike for eastbound and westbound trains. On the approach of a train from the west (on track No. 2), which is to wait at this station for a faster train to pass it, the signalman sets the switches, z z, and pulls down the lower arm of the

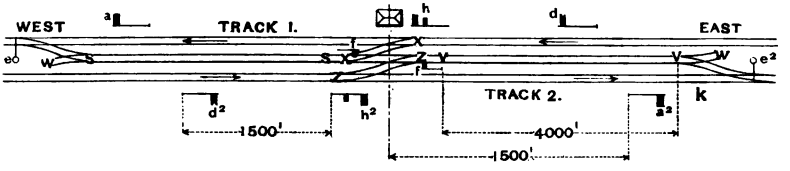

Fig. 15—Passing Side-Tracks—Erie Railroad

home signal h^2, which gives the engineman the indication to proceed from track 2 to the turnout v v. This turnout is long enough to hold the longest train, or, say, 100 cars, 4,000 ft. After the train has cleared the main track, the switches, z z, are set straight, the lower arm of h^2 is restored to the stop position, and then by pulling down the upper arm the signal is given for the fast train to pass through without stopping. If the advance signal a^2 can be cleared, the distant signal d^2 can also be cleared, thus giving the engineman ample notice of the position of h^2 before he reaches it, and thus making it unnecessary for him to slacken

Digitized by Google

speed, even in case of a dense fog. After the passage of the fast train, the conductor of the slow train, stationed at e^2, communicates by an electric bell, the apparatus of which is fixed in a box on a post near the switch, with the signalman in the cabin; and in response to this communication he receives notice, as soon as the fast train has reached the next station, that he may set the switch for the side track and move his train to the main track. The signalman, while giving this notice to the conductor, releases the electric lock on the switch. After the train has cleared the turnout and the switch, the conductor sets the switch for the main track and notifies the signalman, by the bell, that he has done so. Having given this information, he is at liberty to proceed to the next station, the signalman having made sure that the road is clear to that station before he lets the freight train out. The signal a^2 is controlled by switch e^2, the lever in the cabin which works this signal being locked by an electric lock which is governed by the position of the switch. Signal a^2 is placed only about 1,500 ft. from the cabin, for the reason that if it were fixed nearer the switch, say at *k*, it would be too far from the cabin to be worked conveniently.

Dwarf signals, *f f*, are provided for use when trains have to back out of the middle track.

The arrangement of the lock for an outlying switch is shown in Fig. 16. In the cabin there is a hand switch, *a*, and an electro-magnetic lock, L, which, when demagnetized, locks the lever of the signal a^2. To the arm of this signal is attached a commutator, a^2, which is closed only when this arm is in the stop position.

Digitized by Google

A conductor at e^2 desiring to move his train from the siding to the main track, communicates with the cabin by a bell, the circuit of which is not shown in the drawing, and the signalman, if ready to permit the freight train to move, turns his hand switch a to the right-hand point. This forms a circuit from the battery through wire 1, wire 2, lock L^2 on the switch and back to the battery. The armature of L^2 in being lifted releases the switch, which is then thrown by the con-

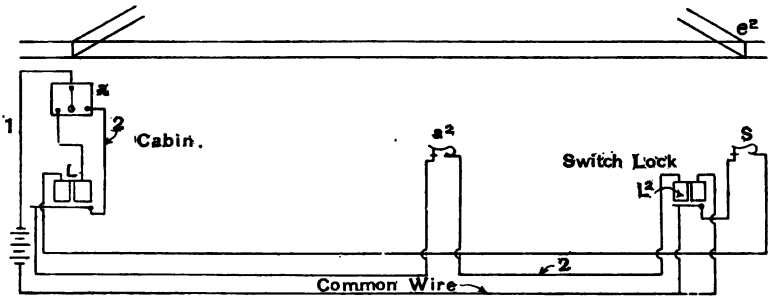

Fig. 16—Electric Lock for Outlying Switches—Erie Railroad

ductor. It will be observed that this circuit could not have been made unless lock L was demagnetized, thus holding the lever of signal a^2 in the normal or stop position; nor unless the signal was in the stop position keeping commutator a^2 closed.

The opening of the switch by the conductor opens the commutator at S, which breaks the circuit through the magnets of lock L on the lever in the cabin. This prevents the signalman from inadvertently lowering signal a^2 to permit another train to proceed toward the

Digitized by Google

misplaced switch. This circuit, which runs through the left-hand contact point of switch *a* in the cabin, also runs through the armature of lock L^2 on the switch, so that it cannot be completed except when the switch is set for the main track and is locked. The signalman, to permit the passage of a train on the main track, must pull the signal lever at L, and this he can do only when his electric switch *a* has been turned to the left hand point.

The officers of the Erie find that the cost of establishing a simple block station—that is, a cabin, with the necessary furniture and fitted with apparatus like that referred to in Fig. 12, is about five hundred dollars. The signaling for a passing station, like that shown in Fig. 15, costs about $2,700. This includes the cabin, the interlocking machine and connections, two dwarf and six high signals (two of the latter with two arms each) and the electric locks for the outlying switches, with their connections.

The Chicago, Burlington & Quincy is the remaining one of the four railroads which made the earliest use of the simple telegraph block system on double track in America. About 1889 this road put up signals and cabins (usually remote from a station) along its double track line from Chicago to Aurora, 37 miles. Since then the space interval system has been put in use, but without special cabins or signals, on the rest of the main line through to the Missouri River; and automatic block signals are in use for four miles out of Chicago; but the part of the plant which calls for attention in this place is that between Western Avenue (Chicago) and Aurora, 33 miles. On this section the practice is,

Digitized by Google

in the main, the same as on the Pennsylvania, and it will be sufficient to note the points in which it differs.

The first difference is in the special arrangement of signals for three tracks and for permissive blocking. On this section there is a third main track. The middle track is used for westbound movements (chiefly freight) during 12 hours of the day (4 p. m. to 4 a. m.), and for eastbound during the remaining 12 hours. The arrangement of signals for these tracks is shown in

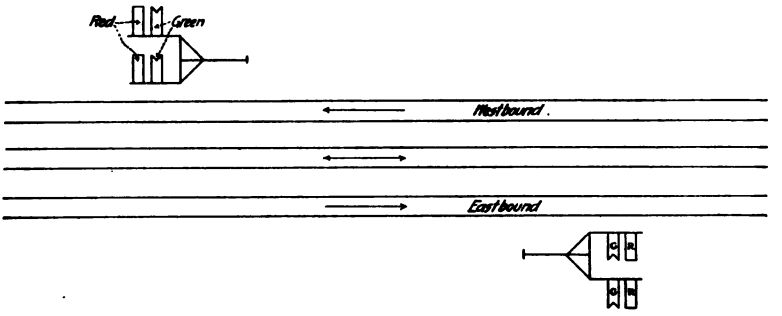

Fig. 17—Block Signals on the Three-Track Line of the Chicago, Burlington & Quincy

Fig. 17. The signals at the left side of the bracket post are for the middle track. The lower arm is not a distant signal, but is for use in permissive signaling. To allow a train to proceed before the preceding train has cleared the block section the signalman lowers the upper arm, but leaves the notched arm in the horizontal position. When both arms are lowered the engineman knows that the section is clear. The permissive signal is given only by a special order from the train despatcher, which the signalman must record in his book.

Digitized by Google

The despatcher never allows more than two trains in the same block at the same time, and he usually requires a time interval of two minutes at the entrance of the block. At night and during a fog the rule requires the signalman to bring a train to a stop before permitting it to proceed under the permissive signal. East of Clyde this rule is in force at all times, and the signalman must deliver to the engineman a written notice ("caution card") advising him that he may expect to find the preceding train in the block section. Another rule in force east of Clyde requires the signalman to restore semaphores to the horizontal position after the engine and two cars of a train have passed, instead of waiting until the rear car has passed.

From Western Avenue to Clyde, four miles, signals are given by bells, as on the Erie; from Clyde to Aurora by Morse telegraph.

Digitized by Google

CHAPTER III

THE TELEGRAPH BLOCK SYSTEM ON SINGLE TRACK

The block system is now largely used on single track railroads; and on all but a very few of the lines thus worked, the plain "telegraph block" is the method employed. Although the space interval is as well adapted to single track as to double, and, under the same circumstances, as necessary on one as on the other, it was at first confined chiefly to double track lines; and the chapters preceding this one deal with double track practice (although the roads named have also introduced blocking on some of their single track lines).

One reason why double track lines were first "blocked" was the obvious one that such lines had the most frequent trains. The introduction of the block system was costly, because it required telegraph operators at many points where otherwise none would have been employed; and this was a more serious consideration 20 years ago than it is now, as competent telegraph operators were not at that time so easily found as now. Cost being such an important factor, only lines carrying a large traffic were thought of in connection with the improvement, and such lines were usually double-track. The cost might have been somewhat lessened by using electric bells, and a brief code, instead of the Morse telegraph, with its complete code, as new signalmen could learn the manipulation of the bells in a very short time, and places could be filled at smaller wages; but from a general disinclination to adopt English no-

Digitized by Google

tions, or by reason of the cautious, not to say uncertain, spirit in which the block system was in most cases introduced, the use of bells was not considered until about 1888. (Though the New York Central used the Sykes apparatus on a few miles of road near New York. This may be considered an exceptional case). Again, the single-track roads, besides having a thinner traffic, felt more confidence in the methods which they already had in force. The train despatcher on a single track road is constantly arranging space intervals for trains running toward one another, and in doing this he can exercise direct supervision, in many cases, over the movements of trains following one another.

The first single track railroad in America which came prominently into notice as running trains under the block system was the Canadian Pacific, which began using it in 1884. It is somewhat curious that while, on double track, blocking was first introduced on account of the increasing frequency of trains, this first single-track example should be on a line of pretty thin traffic. Quite likely the officers of the Canadian Pacific were influenced by English ideas more than was the case with their neighbors in the United States; and their English friends would, no doubt, advise the use of the space interval on all lines where the increased cost over the time interval was not great. With trains an hour or more behind one another, the block system is feasible, even with stations 20 miles apart; and where the general duties of the station agent are light he can maintain the space interval for such infrequent trains with little appreciable addition to his labors. It may be objected that if trains are an hour

Digitized by Google

apart, that is just the place where the block system is least needed; but the fact that a road's trains are regularly kept separated by a long space interval, maintained by telegraph, has a value as an advertisement, and it is quite likely that the Canadian Pacific people fully appreciated this consideration.

It is also to be observed that in a cold country like that traversed by the Canadian Pacific, the exigencies of irregular traffic develop the need of the space interval sooner than in mild climates. In a genuine blizzard, with the mercury 40 degrees below zero, a flagman out a mile from his train, and perhaps five or ten miles from a house, is a poor protection against a collision.

Another consideration which, undoubtedly, may fairly be classed as having been an important factor in the argument for using the space interval on single track roads, is the quality of the discipline of the trainmen. A double track line, carrying large numbers of passengers, and seeking the highest safety for its passengers, would adopt the space interval regulations as a preventive of collisions; it would be argued that collisions from lack of block signals had not occurred, but that the management should strengthen the precautions which would make sure that collisions should not occur. But some single track lines, running only a few passenger trains but numerous freights, no doubt adopted the new plan as a cure. Collisions of freight trains were too frequent, and were costly, and the space interval was introduced specifically as a direct money saver. It was not, as with heavy passenger lines, a question of precautions for the safety

Digitized by Google

of life and limb, and for the reputation of the road, so much as a question of saving expense. And this expense could fairly be charged, in large degree, to lack of discipline; for while some roads, particularly in the West, were putting in block signals because without them the freight trains persisted in running into each other, other roads, older and with more settled conditions as regards personnel, appeared to have secured an equally satisfactory degree of immunity from collision without the block system.

The significant fact in the matter now is that wherever the block system has been introduced it has been retained. While the discipline of the freight train men on some large roads ten or fifteen years ago was pretty bad, and Superintendents sometimes found it so difficult to improve the efficiency of their men that they were in a measure compelled to adopt costly expedients to make up for the weakness of the personnel, a great improvement has been effected. If the only reason for adopting the block system had been the difficulty of getting men to obey orders under the time-interval system, it is quite possible that in some cases there might have been by this time a disposition to restore the old plan. It is not so, however. Where the space interval is once adopted the superintendents and other responsible officers feel such a greatly increased security that they value it more and more each year; and every successive increase in the number of trains running over the road gives additional force to the argument that the block system is necessary for celerity, to say nothing of safety. In the earlier years the Western roads had a poor system and poor per-

Digitized by Google

sonnel; then they had a good system and poor personnel, while now they have a good system and a good personnel.

ON THE CHICAGO, MILWAUKEE & ST. PAUL

One of the companies which has introduced the block system on a large mileage of single track line is the Chicago, Milwaukee & St. Paul; and as the officers of that company have recently made a careful recompilation of their regulations for working the system, a description of the practice of that road will afford the reader the best possible means of getting an insight into the general principles that govern on nearly all single track roads. These new rules are not radically different from those which preceded them, but they embody the results of the combined experience for ten years of all the Superintendents on the six thousand miles of the Milwaukee's lines.

The most fundamental difference between the block signal practice of single track roads (which are mostly in the West) and that of double track lines, like the Pennsylvania (which are mostly in the East), is that on the latter the old regulations for the prevention of collisions are practically abolished (or, at least, the new ones are made the chief dependence and the old rules become auxiliary), while on the former the block signal rules are secondary and the old rules retain their full force. The trainmen are indeed, directed, in both cases, to continue to observe the old regulations as to protecting delayed trains by red flags and torpedoes; but it is obvious to every one, brakemen included, that as regards trains moving in the same

Digitized by Google

direction, which is always the case on a double track line, the block system makes the flagging unnecessary; while on single track the protection of a train from head-end or butting collisions is often effected by means of telegraphic orders sent direct to the conductor and engineman of the train. This throws on these two men a direct responsibility in such specific shape that there is no shirking or evading it, and no chance to shift the responsibility on to other shoulders; so that here the men in charge of trains continue to perform their duties in the same manner as if no block system were in force. In conformity to this plan, a semaphore signal, on the Milwaukee road, does not tell an engineman that the road is clear for him to proceed to a certain place (the next station); it only tells him that, so far as is known by the block-signalman in charge of that signal, he may proceed. He is still bound to make sure, before proceeding, that there is ample time to reach the next side track (or place where trains can meet) before he will be required, by the provisions of the time table, or by orders which he has received by telegraph from the train despatcher, to surrender the right of way to some other train.

C. M. & ST. P. RULES

On certain divisions of this railway, which will be indicated on the time tables of such divisions, trains will be controlled at stations by a block signal system. This system is not designed to relieve train and enginemen from the fullest observance of all general and special rules, special orders, instructions and bulletins governing the movement and protection of trains. . . .

Instructions to Train and Enginemen

1. . . . A block signal arm nearly vertical, or white light, signifies signal is clear and train may proceed if its time table rights or special orders permit it to do.

Digitized by Google

2. The block signals are also used for train orders and all rules applying to train order signals will apply to them.

3. Trains must not pass a block signal at danger except under authority of a clearance card (Form 168) or permissive card (Form 27) which must be obtained from the operator on duty.

4. When the block signal stands at danger, and the operator issues a clearance card which states that he has "no orders" or "no further orders" for the train named, the train receiving the clearance card may proceed if its time table rights or special orders permit it to do so; provided the clearance card does not state

FORM 27.

CHICAGO, MILWAUKEE & ST. PAUL RAILWAY CO.

PERMISSIVE CARD.

.....*Station*..... 189....

Conductor and Engineer No.....

Use Permissive Card from.....

to.....

Train.....*is in Section*

This order will be made in triplicate, one copy to be delivered to Engineer, one to Conductor and one filed by Operator.

.....

Train Despatcher.

CARD	MADE	AT	BY	OPERATOR

that the block signal is at danger for the train holding the clearance card. If the block signal is at danger for the train holding the clearance card, it must have a permissive card in addition before it can proceed. When a train receives a permissive card it must also have a clearance card in addition before it can proceed. Clearance cards are printed in the style shown in Form 168, and when issued as provided by these rules the conductor and engineer must each have a card.

5. A permissive card is used when trains are permitted to pass a block signal at danger and enter a section under notice that the preceding train has not cleared the same section. This is to be used only by direction of the train despatcher.

Digitized by Google

6. When a train is to proceed under permissive card the conductor and engineer must each have a card (Form 27) properly filled out and signed by the train despatcher.

7. Permissive cards will be designated by letter instead of by number. The designating letter, O. K.; time made O. K.; and the train despatcher's initials must be indorsed on the face of the permissive card and signed by the operator before it becomes effective.

8. At certain block signal stations, which will be indicated by a special rule or bulletin on each division where used, permissive arms painted green, and displaying a green or white light at night, are attached to the signal post below the block arm for the purpose of moving trains permissively. . . .

9. When trains receive a caution signal it indicates that the preceding train has not cleared the section, and that the train may proceed as if moving under a permissive card.

10. Trains moving under the authority of a permissive card or caution signal must run with great care and at reduced speed to insure against collision with train ahead.

11. When approaching stations all trains must be governed by General Rule No. 66. [This rule requires all trains except regular passenger trains to approach all stations under control. Inside of yard limits the approaching train is wholly responsible for avoiding collisions.]

12. Trains of an inferior class must not occupy the main track in any section when a train of superior class is due to enter the same section at the first block signal station ahead or in the rear.

13. When a train approaches a block signal station and finds the block signal at danger it will indicate that the section is occupied or that there are train orders, and the conductor must hasten to the telegraph office.

14. After the markers of a train have passed a block signal at clear in the direction in which the train is proceeding, and the block signal is afterward placed at danger in accordance with Rule No. 1, it does not hold the train; and a clearance or permissive card is not necessary before the train can proceed.

15. A train having passed a block signal must not back within 300 feet of the signal without first receiving permission from the operator and protecting by flagman as provided in General Rule No. 62.

16. Block signal stations which are closed either during the day or night will be indicated on the time table or by bulletin.

17. When block signal stations are closed both arms are placed at clear. If closed at night the lamp is left burning. The section is then extended to the next open block signal station. The absence of the light at night must be considered as indicating dan-

Digitized by Google

ger, and trains finding block signal lights out must stop, but may proceed if the conductor and engineer find both block signal arms are at clear. If either of the arms are at danger, trains will not proceed until a clearance card has been obtained from the operator, who must be called for that purpose.

18. Trains must not go to a closed block signal or a non-telegraph station to be met or passed by other trains without special orders from the train despatcher, copies of which will be given

FORM 168.

CHICAGO, MILWAUKEE & ST. PAUL RAILWAY.

CLEARANCE CARD.

.....*Station*.....189....

To Conductor and Engineer Train.....

I HAVE NO.....*ORDERS FOR YOUR TRAIN.*

BLOCK SIGNAL IS AT DANGER FOR.....

If Block Signal is at danger for the train holding this Clearance Card, a Permissive Card (Form 27) must be procured before the train can proceed.

When the authority given by Rule No. 19 *is used, Operators will fill out the following:*

ON ARRIVAL OF TRAIN.....*BLOCK SIGNAL WILL BE AT CLEAR.*

To comply with Rule No. 18 *Operators will fill out the following:*

BLOCK SIGNAL IS AT DANGER FOR TRAIN..... *AND TRAIN*.....*TO MEET (OR PASS) AS PER SPECIAL ORDER No*.....

This Clearance Card does not interfere with nor countermand any General or Special Rule, Instructions or any Special Orders you may have received from the Train Despatcher.

Time issued.....*m*.....*Operator.*

to the operators at the nearest block signal station on each side of the station where trains are to meet or be passed. Operators receiving such orders will keep their signal at danger and issue a clearance card (Form 168) reading:

"Block signal is at danger for train — and train — to meet (or pass) as per special order No. —."

19. At block signal stations where sidings are in advance of the block signal, operators may indorse on clearance cards that their signal will be clear on the arrival of a specified train, as provided on the clearance form. Such an indorsement does not allow the

Digitized by Google

train holding the card to proceed after the arrival of the specified train, unless its time table rights or special orders authorize it to do so. Trains holding such permission must know that the specified train has arrived and see the markers before proceeding.

20. On double tracks, trains will not foul the wrong main track until the conductor and engineer have in their possession written permission from the train despatcher to do so. This permission must be given on Form 53 "cross over card" with all the blanks properly filled. After such permission is obtained, and the train has been protected in both directions in accordance with the general rules, the train may proceed to occupy the wrong main track.

21. When the train is again on its proper track, entirely clear of the wrong main track, the conductor must write a telegram addressed to the train despatcher stating "My train is clear of the ——— bound track. Time ——— M.," signing his name in full. The writing and signing of this telegram must not be delegated; the conductor must personally write and sign this telegram.

22. In case the telegraph fails the operator is permitted to issue a clearance card (Form 168) stating that the signal is at danger for telegraph failure, provided he has no orders requiring him to hold the train to which the clearance is to be delivered.

23. Trains receiving a telegraph failure clearance may pass the block signal at danger, provided their time table rights or special orders permit them to proceed, or provided a flagman has been sent ahead the distance required by the general rules.

24. Form 53 is the form of the cross-over card referred to in Rule No. 20.

Instructions to Telegraph Operators

30. The telegraph operator on duty will have charge of block signals, and will be held responsible for their proper handling, in accordance with following instructions:

31. They must keep the signals at danger, except when placed at clear to allow a train to pass, or except during the hours when the block signal station is authorized to be closed.

32. They must not permit a train to enter a section following another train until the preceding train has been reported clear of the section, except when the train despatcher authorizes the use of permissive card or caution signal as per Rules Nos. 49 and 50, or except as provided in Rule No. 57.

33. On single track they must not permit a westbound train to enter the section, except as provided in Rule No. 57, until they have notified the next block signal station west to block eastbound trains for ——— train, using signal 47 for that purpose, and have received an acknowledgment as per Rule No. 58.

34. The operator called for signal "47" must not accept it if an

Digitized by Google

eastbound train is in the section, and will notify the operator offering the signal to hold the westbound train.

35. Operators must not permit a train to enter a section when a train from the opposite direction has been reported into the section by the next block signal station, except as provided by Rule No. 57.

36. At block signal stations where sidings are in advance of the block signal and a train is awaiting the arrival of an opposing train, operator may hold all other trains, except the expected train

FORM 53.

CHICAGO, MILWAUKEE & ST. PAUL RAILWAY.

CROSS-OVER CARD.

.....*Div*.....*Station*.....189....

To Conductor and Engineer Train.....

After protecting your train by sending out Flagmen as per General Rules, you may cross to the wrong main track at.....*Station. The authority granted by this card is void after*.....*m. Report your train when clear of the wrong main track as per Block Signal Rule No.* 21.

.....

Train Despatcher.

CARD	MADE	AT	BY	OPERATOR.

at the block signal station in advance, and issue a clearance card, which states that on the arrival of the train specified on the clearance card, the signal may be considered at clear. Operators issuing clearance cards will make three manifold cards. Two cards will be delivered to the conductor and one placed on file for reference.

37. In answering the "47," as per Rule No. 36, the operator at the block signal station in advance must except the train already in the section in the following form: "I. I. B. 47 except No. —— for ————." Both operators must make full record of this on their train register sheet.

Digitized by Google

38. When there are no train orders and the section ahead is clear for an approaching train, the block signal should be changed to clear as soon [as], but not before the engineer is in sight of it, that the train may enter without reducing speed.

39. When the block signal has been placed at clear to allow a train to enter the section, it must be placed at danger immediately after the last car, carrying markers, has passed the signal.

40. After the engine of a train has passed a block signal at clear in the direction in which the train is proceeding, the block signal, when placed at danger, does not hold the train, and operators must obtain the signature of conductors to train orders which may be received after the arrival of a train, the engine of which has passed the block signal, before replying to the train despatcher that his signal is out to hold the train.

41. When it is necessary for a train that has passed the block signal to re-enter the section in its rear, the operator will not permit it to do so unless the section is clear, nor until he has blocked trains at the block signal station toward which the train will back.

42. (Markers on rear car and what to do if they are missing.)

43. Operators must keep a correct record of trains, etc.

44. They must promptly report the time of departure of all trains or the clearing of the section, to the block signal stations east and west.

45. They must not report a train clear of the section until they have seen the markers, nor until the last car has passed the signal 300 ft. in the direction in which the train is moving.

46. When a train is on a siding clear of the main track, and the markers have been seen or the conductor reports that all his train is on the siding, the section may be reported clear.

47. When a train is to take siding at their station to be passed by a following train, operators must not report section clear until the train is on the siding clear of the main track and the markers have been seen or the conductor reports that all of his train is on the siding clear of the main track.

48. When trains are to meet at a block signal station, operators will block all trains until the train or trains that are to take the siding have cleared the main track and the markers have been seen or the conductor reports that all his train is on the siding clear of the main track.

49. (Covers same ground as Rules 6 and 7.)

50. At block signal stations where permissive arms are in use the operator must receive authority to use permissive signal in the same manner as at stations where cards are used, and will fill out one card and file for reference.

51. (Covers same ground as Rule 8.).

Digitized by Google

52. As block signals are also used for train orders, operators must be governed by the general rules relating to train order signals.

53 and 54. (Cover same subject as 4.)

55. (Covers same as 17.)

56. When a block signal station is closed, the block signals must be placed at clear. At night the lamp must be left burning.

a. When a block signal station is re-opened the block signals must be placed at danger immediately, and the block signal stations on each side and train despatcher notified. The position of trains must be ascertained and a record of any train in the section made on the train register sheet.

b. The first train arriving after a block signal station is open must not be allowed to pass except by authority of the train despatcher, who will instruct whether a clear signal or a permissive card is to be given.

c. When a block signal station is closed the block wire will be arranged to work through the closed station, and operators on either side will consider the section as extended with no change in the rules governing the operation of the signals.

57. (Covers same as 18.)

58. When it is desired to block trains at stations ahead, or back, for any purpose, the following signals must be used:

"47" block eastbound trains.

"58" block westbound trains.

When this signal is transmitted the operator receiving it will respond: "I. 13 B. 47," or "B. 58," as the case may be, and sign his initial and office call, and will block such trains until the section is reported clear.

59. When a freight train is inside the outer switches at certain block signal stations which will be indicated by special rule, it may be reported as arrived; provided the operator has seen the markers or has been notified by the conductor that all of his train is inside the switches. Following trains may [then] be given a clear signal, except that if a passenger train is to enter the section it must have a permissive card before it is allowed to proceed. When a passenger train is at a block signal station no train will be permitted to follow until the passenger train has cleared the section, except on special telegraph orders from the train despatcher.

60. (Covers same as 20.)

61. In case the telegraph fails from any cause, operators will be governed as follows:

a. They may issue a clearance (Form 168) stating that the block signal is at danger for telegraph failure.

Digitized by Google

b. If they have no report that the preceding train has cleared the section, they must issue a permissive card in addition to the clearance.

c. If they have special orders to hold a train they must hold it indefinitely.

d. If they have orders for delivery to a train they must be governed by General Rule No. 104. [Such an order is void if O. K. has not been received, but must be shown to conductor and engineman.]

These rules of the Chicago, Milwaukee & St. Paul are so full and so clearly worded that the reader will readily understand the practice from a single perusal. The rules prescribing the procedure for sending forward a train under ordinary circumstances are Nos. 32 and 38. The cross-over rule, No. 20, prescribes a practice which is not found on many other roads. This rule, forbidding the irregular use of a main track, even at a station, and even when suitable flag protection has been provided, unless permission has first been received from the train despatcher of the Division, makes it possible to run fast special trains at any hour of the day or night on very short notice. At large stations and at certain junctions this rule is, of course, permanently suspended, and a notice specifying such stations is kept standing on the time table. This is necessary, both to facilitate switching and train work at the station, and to relieve the despatcher of the labor of issuing a large number of orders. But at the multitude of smaller stations the rule is found by the officers of the road to be a desirable safeguard, and the despatcher has as good control of his tracks as though no cross-overs existed. When he has a fast eastbound train that would be delayed if its track were to be

Digitized by Google

used at a station by a westbound train, he withholds the cross-over permit from the latter until the eastbound has passed; and when he has occasion to issue a cross-over order he first blocks all trains one station back.

Digitized by Google

CHAPTER IV

SINGLE-TRACK BLOCKING ON THE ERIE, THE WABASH AND THE ATCHISON

Among the prominent roads using the block system on single track are the Erie, the Wabash and the Atchison, Topeka & Santa Fe.

On the Erie lines west of Salamanca the block system has been in use since 1891. According to the rules then prescribed and which have been continued in use to the present time and are now in force from Salamanca to Chicago, 574 miles, the block signaling is under the immediate active control of the train despatchers, the length of road to be managed by each despatcher having been made short enough to enable him to order signals for all trains at all stations without delay.

On the busiest portion of the road a despatcher controls about 40 miles. The signal is kept normally in the stop position and, except in case of failure of the telegraph wire, is not moved from its position except by order of the despatcher. Ordinarily the despatcher gives each station the proper instruction before the train arrives, but in the absence of an order the operator notifies the despatcher as soon as a train is known to be approaching. The operator says "No —— coming," and the despatcher replies "red," "green" or "white," according as he desires to have the train stopped or sent forward permissively or sent forward

Digitized by Google

with a clear block. A train having been stopped, it must not proceed without a clearance card, nor until the signal is shown in the caution or the safety position. Where a train is to use a side track beyond the station, the conductor remains at the telegraph office until the signal to proceed is shown and then repeats it to the engineman by white or green flag or lantern.

As some side tracks are not conveniently located, as related to the telegraph office, there is a rule requiring the conductor to go personally, on arrival, to the telegraph office, when necessary, in order to enable the operator to promptly give a clear signal to other trains after the main track is clear. Where an operator has to give a go-ahead signal for two or more trains to go out of a side track which is beyond his signal, he is required to put the signal back to the stop position after each train and then clear it for the next following train only on the order of the train despatcher.

All conductors and enginemen are required to follow the ordinary time-table and train rules as though no block system existed.

On this road the permissive or caution signal is given by showing a semaphore arm inclined upward at an angle of 60 degrees. To provide for this signal, Mr. Mozier, the Superintendent of Transportation, designed the semaphore shown in the engraving, Fig. 18. The arm A is shown in the normal or stop position, in which it is held by a counterweight B, which is attached to the arm A by chains as shown. The signal is pulled to the safety or all-clear position by pressing downward on the lever C in the cabin, and to the caution or permissive position by moving this lever upward.

Digitized by Google

If either or both of the connections from the office should break, the counterweight would pull the arm to the "stop" position if it were not already in that position. When the semaphore arm is pulled down, the lamp which in the drawing is hidden behind the

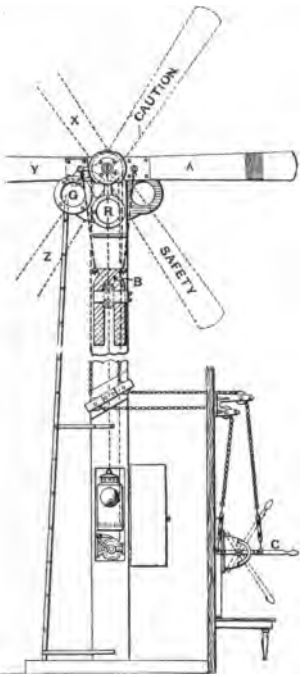

Fig. 18.—Mozier's Three-Position Semaphore Signal

red lens, is uncovered and shows white or all-clear. When the arm is moved upward, the green lens G is moved to a position in front of the lamp. The letters X Y Z indicate the positions of an arm on the other side of the post, which is used for signaling trains

Digitized by Google

moving in the opposite direction. In the Mozier signal a hollow post is used, and the lamp, which is suspended in position by a chain running over a pulley, is lowered within the post for cleaning and inspection.

The signal levers in the office are fitted with Mozier's patent shunt for cutting out the keys of the telegraph instruments. By this arrangement the signal may be fastened in the all-clear position, without danger of accident from forgetfulness, as the lever when in that position closes the telegraph circuits around the telegraph keys, while not cutting out the relays, so that it is impossible for the operator to accept another train, or to communicate at all by telegraph, until he has put his signal back to the stop position.

Officers of the Erie say that they are well satisfied with the plan of having all block-signal operations performed by direct orders of the despatcher. The chief advantage claimed is that the station man does not need to give so much time and attention to the telegraph, and therefore can better attend to his other duties. At many small stations the agent performs all his duties, including telegraphing, without an assistant, whereas if he had to be on hand at the telegraph instrument to give prompt attention to the needs of trains both at his own station and at the stations east and west of him he could not do so. More despatchers are required than on other roads, but not nearly so many station men. The despatchers say that they like to control the block signals in this way. They have a more satisfactory feeling of safety in handling the trains, and the prevention of blockades at terminals and junctions is made easier.

Digitized by Google

The despatchers on this line have for several years taken advantage of the block system to make easier the work of sending telegraphic train orders. According to the usual practice, a despatcher's telegraphic order, directing a train to run ahead of or later than its regular time, or changing the place at which it shall meet a train running in the opposite direction (on single track), must be repeated back to the despatcher by the operator who receives it, must be read aloud to the operator by the conductor or engineman, or both, and must be signed by one or both. The despatcher must not finally approve the order until these signatures have been affixed. These safeguards are adopted to make sure that no collision shall occur from a misreading of the order. But with the block system in force, collisions are provided against at all times by the block-signaling; not only when it has been necessary to issue telegraphic orders, but for every regular movement as well. This being so, despatchers' orders may be delivered without signature (and even without repetition); for a mistake either in writing or reading could do no worse harm than to cause delay (by giving preference to a wrong train). Taking advantage of this, the Erie despatchers issue many of their orders on "Form 19," requiring no signatures; and operators are able to deliver to both enginemen and conductors without requiring the train to be stopped. In the case of a heavy train, and especially on an ascending grade, this often obviates annoying and expensive delays. By attaching an order to a light hoop of rattan, wood or metal, it can be delivered to a train running at full freight-train speed, and even

Digitized by Google

faster, the hoop being held (at the end of a stick, if necessary) so that the engineman can run his arm through it.

The Wabash began using the block system in 1887. In the chief features the practice on the Wabash is the same as that of the Chicago, Milwaukee & St. Paul. A signalman must not put his signal in the all-clear position until the train for which it is intended has ap-

THE WABASH RAILROAD COMPANY

Train Register Sheet at ..... Block Station ..... 190.. ..... Signalman from Midnight to .. M. ..... Signalman from .. M. to .. M. ..... Signalman from ..... to Midnight.

Westbound.

Train No.	Engine No.	Time Entered Block at ..... Station.	Time here. Arrv'd	Cleared Block EK	Dep'td	Time Cleared Block at ..... WQ	Opr. and Time Ack'd.
.....	.....	.....	.....	.....	.....	.....	.....
.....	.....	.....	.....	.....	.....	.....	.....
.....	.....	.....	.....	.....	.....	.....	.....

INSTRUCTIONS

Signalman must enter on his register sheet the number of the train named before responding. . . .

Each time before giving clear signal to a train or allowing a train to depart, signalman will perform the three following acts,

BEFORE LETTING A TRAIN GO WEST:

(*a*) Examine register sheet and be sure that all trains coming east have arrived at your station and cleared block for which you gave "13 B. W."

(*b*) Examine register sheet and be sure that all trains going west which have departed from your station have arrived at next block station west and cleared block.

(*c*) Get "13 B. E." from next block station west.

Keep register sheet under train orders. All service must be written in ink on registry sheet and same carefully filed away for future reference.

Digitized by Google

proached near enough to permit the engineman to see it. This rule is designed to afford a check on the signalman. If an engineman finds a signal in the all-clear position when he first comes in sight of it he stops his train at the station or cabin and inquires why the arm was not moved after he came within view of it. Thus the signalman must take care to see that, when he moves the lever to put his signal in the stop position, the arm actually assumes that position, and he must not leave the signal in the all-clear position long enough for two trains to pass under its authority.

The Wabash prints a part of the instructions for signalmen at the bottom of the register sheet on which the record of trains is kept. A copy of one side or half of this sheet (Form 444) is shown on Page 56.

The Atchison, Topeka & Santa Fe.—This road has, within the last two years, introduced the use of the block system over several hundred miles of its lines, including some lines on which the number of trains is very small. Some of the block sections are as much as eight miles long. This company, like the Erie lines west of Salamanca, uses a signal by which the caution or permissive indication is given by inclining the semaphore arm upward. The latest design of signal for this purpose, which was made by the Union Switch & Signal Company, and which is called "Style D, three-phase," is shown in the accompanying drawing, Fig. 19. The spectacle casting attached to the semaphore blade has three openings, one being filled with red glass, one with green and the third with no glass. The casting is made in this form so as to permit the substitution of

Digitized by Google

a color in the place of "white" for the all-clear night indication when that shall be found desirable. The counterweight, C, is an iron casting which acts as a counterweight and is put on for no other purpose. When the arm has been pulled down to the all-clear position this counterweight acts, as in the case of the ordinary semaphore, to restore the signal to the hori-

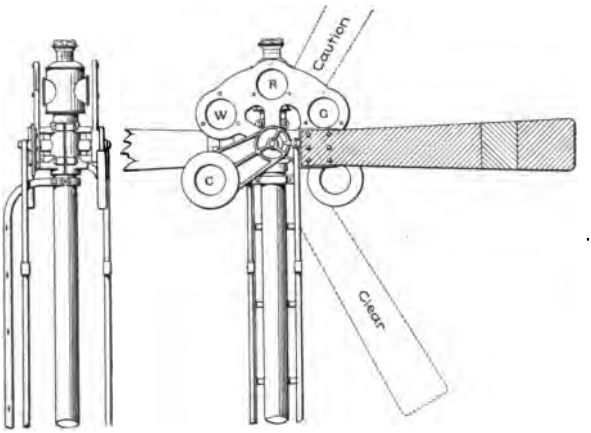

Fig. 19.—Three-Phase Semaphore—Atchison, Topeka & Santa Fe Railway

zontal position in the event of the breakage of the connecting rod; but when the signal is moved upward to the caution position (by pushing the rod upward) the counterweight becomes disengaged from the blade and remains in the position shown in the drawing. It rests against a stop fixed to the post. In case the connections break while the arm is inclined upward, it falls to the horizontal or stop position by its own weight.

Digitized by Google

As will be seen from the drawing, this signal is mounted on a cylindrical iron post, and both the eastbound and westbound signals are fixed to the same post. A single lamp answers for both.

Where the three-position signals have not been introduced, the Atchison uses a card for permissive block signaling. In most cases the block signal operators on the Atchison communicate with one another by Morse telegraph, but at a number of stations (14 out of 153) telephones are used. These are small stations where there is little or no freight and passenger business, and attendants are hired for about $10 a month less than the rate paid at ordinary stations.

The Atchison uses Hall automatic block signals on 12 miles of its line, and it also has one section on which the Webb & Thompson train staff is used to maintain the space interval between trains.

The more important lines using the manual block system on single track, aside from those already named are the Canadian Pacific, the Chesapeake & Ohio, the Chicago, Burlington & Quincy, the Chicago & Northwestern, the Chicago, St. Paul, Minneapolis & Omaha, the Cleveland, Cincinnati, Chicago & St. Louis, the Lake Shore & Michigan Southern, the Lehigh Valley, the Norfolk & Western and the Pennsylvania lines west of Pittsburgh.

Digitized by Google

CHAPTER V

THE CONTROLLED MANUAL BLOCK SIGNAL SYSTEM

When we leave the simple telegraphic block system, in which the essential feature is electrical communication between the two *men* situated respectively at the entering and the outgoing ends of a block section, and in which the outdoor signals are actuated solely by the hand power of these signalmen, we find practically all other block signaling comprised in two classes, (1) automatic and (2) "controlled manual." The automatic comes first, chronologically; and in this country it is now first in importance; but the more logical course will be to consider first the controlled manual. This class of apparatus, commonly called the "Sykes," after the name of the English inventor, W. R. Sykes, whose instruments were the first to be used in this country, is in use on the New York Central & Hudson River from New York to Buffalo, 440 miles; on the New York, New Haven & Hartford from New York (Woodlawn) to Boston, 220 miles, and on the Erie from Jersey City, N. J., to Turners, N. Y., 46 miles. In England the term "Lock-and-block" is commonly used to designate controlling apparatus of this kind.

The apparatus consists primarily of a series of electro-magnets so connected with the levers by which the operator moves the outdoor signals that the operator at the outgoing end of a block section controls the lever by which the operator at the incoming end admits the trains. Thus, after A sends a train to B and

Digitized by Google

puts his signal at "stop," he is unable to again pull the signal to "all clear" until B unlocks his (A's) lever, and B, of course, refuses to do this until the train has arrived and passed out of the section. To provide against a possible mistake by B, who might prematurely unlock A's lever, there is also an automatic arrangement by which A's lever, after having been cleared to admit a train, and then put back again, cannot be unlocked until the train itself actually passes out of the section. This is accomplished by running an electric circuit, which controls A's lever, through two or three rail lengths of the track at a point just beyond B. The circuit goes from the battery to one rail of the insulated section of track, thence by line wire to A's signal, which it holds locked at "stop" by energizing an electro-magnet. On the passage of a pair of wheels over these insulated rails, most of the current passes through the wheels and axles from one rail to the other, and thence back to the battery, without going to the electro-magnet at the distant station. This demagnetizes that instrument and allows the signal to be again cleared.

It will be seen that where trains are run permissively —that is, where a second train passes A before the first one has passed B—the automatic feature of this system becomes useless, as the first train will release A's signal while the second train is still in the section, and the apparatus will then afford no protection against a careless operator admitting a third train to the section before the second has cleared it.

The controlled manual block signals on the Providence Division of the New York, New Haven & Hart-

Digitized by Google

ford (Boston to Providence, 44 miles) are worked by the latest improved apparatus of the Union Switch & Signal Co., which was designed by Mr. John P. Coleman, Engineer of that company. The construction of Mr. Coleman's machines as there used is best understood by an examination of Figs. 1*a*, 3 and 4 of the drawings accompanying his patent on the apparatus; and the diagrams which I show are copied from those which are used in the patent specifications.

To enable the reader to more clearly understand the apparatus, Mr. Coleman first describes (Fig. 1*) a combined wire-circuit and track-circuit block signal system, and we may therefore proceed to examine Figs. 1 and 1*a* together. The drawings are so arranged that the train movement to be considered is from right to left, and the stations, A, B, C and D, are thus arranged.

The reader who is disposed to omit this chapter because of the confusing mass of reference numbers on these drawings, especially in Fig. 1*a*, should bear in mind that the operations of the various electro-magnets and levers are in practice much simpler than they appear to be when considered through the medium of a written description. One unacquainted with electric signaling apparatus should prepare himself by reading through the description once, rapidly, in order to familiarize himself with the numbers of the principal parts, before attempting to read it with a view to minutely following out all of the different operations. By such preliminary reading a dozen or more of the principal numbers can be fixed in the memory, so that the

*See inset No. 1.

Digitized by Google

references to Figs. 3 and 4, which are frequently necessary to make clear some part in Fig. 1*a*, need not interrupt the study of the circuits.

Fig. 3 is a side elevation of a Coleman instrument,

Fig. 19a.—Coleman Block Signal Instrument

such as is used at stations C and D. Fig. 4 is a sectional elevation of the same. Fig. 5 is a front elevation, Fig. 6 a sectional plan, Fig. 7 explains the indicating mechanism and Fig. 8 is the banner. The appearance of one

Digitized by Google

of these instruments when set up is shown in Figs. 19*a*, 19*b* and 19*c*.

Beginning now with Fig. 1, station A, lever 1 works signal 3 through the electric slot 2. (The electric slot is described on a subsequent page.) The locking mechanism consists of a pivoted sector block 4, provided with a projecting lug 5, which latter is raised whenever the signalman, preparing to move his signal, lifts the rod attached to his lever for the purpose of unlocking the lever. By the finger, 7, the armature of the electro-magnet, 9, controls the movement of 4, and through that controls lever 1.

The mechanism at station B is similar to that of A.

The circuit of electro-magnet 9 is formed by wire 13, make-and-break mechanism *a* on relay 14; wire 15, make-and-break mechanism *b* at station B, wire 16, battery, and wires 18, 19 and 20, wire 19 being common to all the stations. The spring and contact point *b* at B is controlled by sector block 4*b*, and is only closed so as to energize 9 (at A) when lever 1*b* is locked in the normal position (the position shown in the drawing). If this lever is not normal the circuit of 9 is broken at *b*, so that finger 7 will drop into the path of block 4, thereby locking lever 1 with its signal in the normal or stop position. Hence, it is necessary for the operator at A to ask B to put lever 1*b* in the normal position before he (A) can clear signal 3. Therefore, a train can never get permission to pass A until assurance has first been obtained that the block A-B is closed at its outgoing end. In other words, the apparatus compels such a procedure that a train cannot

Digitized by Google

be given leave at one time to pass through two block sections.

A train being ready to proceed from A to B the signalman pulls lever 1, clearing signal 3, and the train proceeds. As soon as it enters on the section of track which is electrified by battery *y*, relay 14 is de-energized* and the circuit of magnet 9 is broken at *a*. Finger 7 then drops and rests on 4, which has been shifted, by the signalman's action, to the position shown by the dotted line. Now, when the signalman, after the passage of the train, returns lever 1 to normal, finger 7 will drop farther and hold 4, so as to lock lever 1. Lever 1 cannot be again cleared (for a second train) until 7 is lifted by the armature of 9, which requires the circuit of 9 to be closed at *a*. This will be done when the last car of the train passes B, which allows battery *y* to again close 14.

But the train will not pass B until the signalman there clears his signal 3*b*, by pulling lever 1*b*. In doing this he opens (at *b*) the circuit of magnet 9, so that before A's signal can be again cleared, not only must the train have passed B; B must also have put his signal at normal, thus protecting the train by a stop signal behind it.

The "electric slot" 2 at A causes the signal to go to the stop position after the passage of each train, whether the signalman moves his lever or not. This prevents a lazy or careless signalman from permitting a second train to enter a block section before the first has passed out of it.

*A description of the track circuit is given on page 108.

Digitized by Google

The circuit of the slot magnet is formed by wire 21, make-and-break mechanism *c* (formed by a second armature and contact point on relay 14) wire 22, electro-magnet 23, make-and-break mechanism *d* formed by armature and contact point of magnet 23, wires 24 and 25, battery 26, wire 27, common wire 19 and wire 21*c*. As soon as the train enters upon the track section between A and B, relay 14 is de-energized, and the circuit of the magnet of the electric slot is broken, not only at *c*, but also at *d*. The breaking of this circuit permits the signal to go to the stop position regardless of the position of lever 1. The second break (at *d*) is interposed in the electric slot circuit for the purpose of preventing the operator from throwing his lever forward to normal position, as soon as the train has passed beyond B (which passage restores the break in the slot circuit at *c*), and, without allowing his lever to lock, "picking up" the signal and shifting it to all-clear without first getting the consent of B (by bell-code, telegraph or telephone) as required by the regulations.

The make-and-break mechanism at *d* is formed by the armature and contact point of magnet 23, so that the break at *d* cannot be closed except by the excitation of the magnet 23 through some other circuit than that formed through its own contact point and armature. This auxiliary circuit is formed by wire 21 extending from the slot 2, make-and-break mechanism *c*, wire 22, electro-magnet 23, wire 28, make-and-break mechanism *e*, wires 29 and 25, battery, wire 27, common wire 19 and 21*c*. The mechanism *e* is controlled by sector block 4, and is only closed to complete the auxiliary circuit, when lever 1 has been shifted to

Digitized by Google

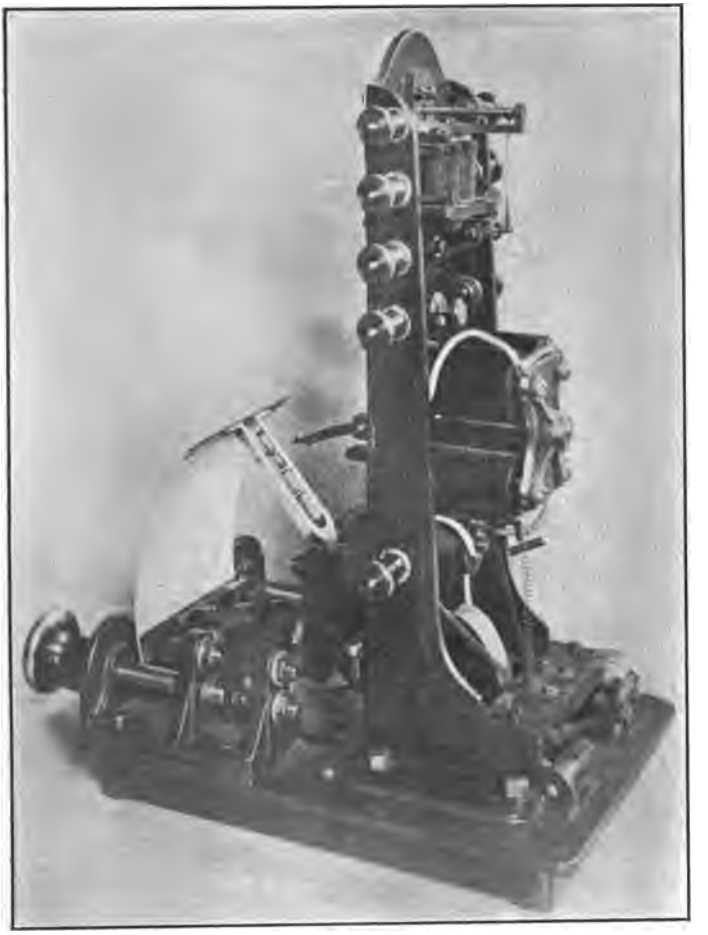

Fig. 19b

Digitized by Google

normal position and locked therein by the dropping of its latch.

The movement of the latch locking of the lever so shifts block 4 as to close the circuit at *e*, and this movement is such that the finger 7 will drop behind the sector block, thereby locking it until released by B, as described. The mechanical closing of the auxiliary circuit at *e* excites magnet 23, thereby closing the main electric slot circuit. This main circuit is necessary in order to hold the slot mechanism locked when lever 1 is shifted to clear the signal, as this movement of the lever will break the auxiliary circuit at *e*.

So much for the combined wire-circuit and track-circuit arrangement. In practice, however, this arrangement is rarely, if ever, used; and the description has been introduced, as before stated, to simplify what is to follow. Controlled manual signaling is designed for long block sections, where rail circuits would be both complicated and expensive; and apparatus which provides all necessary safeguards, without the continuous rail circuit is illustrated in Fig. 1*a*.

At B the passage of a train restores to A the control of lever 1 (if B puts his lever normal); but at C, instead of thus directly unlocking B, the passing train only releases C's plunger (30); so that the human agent must actuate the plunger to make the passage of the train at C of benefit to the operator at B. The operator at C, instead of merely performing the routine function of putting his signal to danger, which he would naturally do, without regard to what was wanted at B, must also "plunge" (at the express request of B) and for no other purpose than to aid B in giving a clear signal to the

Digitized by Google

Fig. 19c

Digitized by Google

next train. In practice C puts his lever normal as soon as a train passes; but he does not plunge for the next train until B requests him to do so.

Returning now to the train movement which we have followed from A to B, we shall note that the train cannot pass B until signal 3*b* is cleared. But this signal, having been placed normal to admit of unlocking A, cannot be again cleared without the consent of C. The apparatus by which C gives this consent is shown in Figs. 1*a*, 3, 4, 5 and 6.

On the bed of this mechanism is arranged a sliding bar or plunger 30, which is normally held in by spring 31. A locking dog, 32, is so pivoted that when free to move and the plunger is at the inward limit of its movement, a projection, 33, on the dog will drop into a hole in the plunger and hold it. When the mechanism is in normal condition, the dog is held up free from the plunger by arm 34. On the plunger is secured an angle piece, 37, one part of which projects upward so as to strike against and shift an arm 38, projecting from the rock shaft 35, when the plunger is pulled out, thereby so shifting the arm, 34, as to permit the dog to drop down. The movement of the plunger to shift the rock shaft and the arm 34 is sufficient to remove the opening in the plunger out of line with the projection on the dog, which will then rest upon the plunger until the latter returns to its normal or inner position, when the dog will be free to drop and lock it.

On the rock shaft carrying the dog is formed an arm, 32*a*, which, when the projection on the dog drops into the opening in the plunger, presses spring 39 against a spring, 40 (Fig. 6), which is attached to a

Digitized by Google

block, 41, of insulating material, forming the make-and-break mechanism f, Fig. 1*a*. The continued movement of the arm 32*a*, will also force the spring, 40, out of contact with the spring 42, also attached to block 41, and forming, in connection with spring, 40, the make-and-break mechanism *g*. As indicated in Fig. 1*a*, spring 39 is connected by a wire, 43, to a binding post, 44, on the machine. The spring 40, is connected by a wire, 45, to one pole of an electro-magnet, 46, secured, as shown in Figs. 3 and 4, to the vertical frame 36, and the spring 42 is connected by a wire to one end of the resistance coil 47, also attached to the frame 36; the opposite end of the resistance coil being connected by a wire 48 to a binding post 49. The other pole of the magnet 46 is connected by a wire, 50, to a spring, 51, adapted to be forced into contact with a spring, 52, by an arm, 53, on the rock shaft, 35, as the shaft is rotated by the outward movement of the plunger, as described. These springs, 51 and 52, are attached to blocks of insulating material secured on the frame 36, and form the make-and-break mechanism *h*. The spring 52, is connected by a wire 54, to a binding post 55, on the machine.

On the swinging carrier 56, of the armature 57, of the magnet 46, is formed a slotted projection, 58, in which is pivoted a spring-actuated pawl, 59, adapted to engage a crossbar, 60, in the slotted end of the arm 61, carried by the rock shaft 35, when said arm is thrown up by the outward movement of the plunger as described. Pawl 59 remains in engagement with crossbar 60, only while magnet 46 is active. As soon as 46 is demagnetized, the weight of the several arms on the

Digitized by Google

rock shaft, 35, will swing the carrier 56 out, thereby releasing the crossbar from engagement with the pawl. A second magnet, 62, has an armature, 63, secured to arm 64, of a bell crank lever. At the end of the other arm of the lever are formed shoulders or stops, 66 and 67. As arm 61 swings down, when magnet 46 is de-energized, crossbar 68 comes into contact with the shoulder 66, provided magnet 62 is not closed, as is the case when 46 is cut out to permit the arm 61 to drop. Arm 61 having been arrested by 66, it is necessary in order to permit it to complete its downward movement, that magnet 62 should be closed, lifting stop 66, whereupon 61 will drop a short distance, being again arrested by the upper crossbar being caught by stop 67. In order to release 69 from 67 and permit it to drop entirely down, magnet 62 must be cut out.

One pole of this magnet is connected by wire 70, to binding post 55, and the other pole is connected by wire 71 to a binding post, 72. A second connection is made from this pole of 62 to a spring, 73, with which spring 74 can be forced into contact by closing 62. These springs form the make-and-break mechanism *i*. Spring 74 is connected by a wire, 75, with a binding post, 76.

On a bracket, 77 (Fig. 3), is attached a miniature signal post, 78, and also an electro-magnet, 80, having an armature, 79, triangular in cross-section and attached to a shaft, 81. (See Fig. 7.) On the opposite or front end of the shaft 81 is attached a miniature semaphore blade, 82. The armature is normally held by a spring, 83, so that its apex is out of line with the pole of the magnet, the signal 82 being at the same time at

Digitized by Google

normal or danger position. When the magnet is excited the armature will be shifted so that its apex is in line with the pole of the magnet, thereby shifting the miniature signal to safety position. This movement of the armature presses spring 83 against spring 84 at *j*. Spring 83 is connected by wire 85 to binding post 86, which is also connected to binding post 55, and spring 84 is connected by wire 87 to spring 88, normally in contact with spring 89, which is connected to the binding post 90. The spring 88 and the spring 89, with its binding post 90, are secured to the vertical frame 36 in such relation to the rock shaft 35 that a projection, 91, thereon (Fig. 4) will force one of said springs away from the other when the rock shaft is rotated by the outward movement of the plunger. Springs 88 and 89 (*k*) are separated at the same time, or nearly so, that 51 and 52 are forced together.

One pole of the magnet 80 is connected by a wire, 92, to binding post 93, and the opposite pole is connected by wire 94 to the binding post 95.

The rock shaft 35 has another arm, 96, carrying the lower end of banner 97. The upper end of the banner is guided by arm 98. When the banner is down the word "Free" will appear at the glass-covered opening in the case, indicating that the train has passed beyond the station, and that the signal has been shifted to and locked in normal position. When the banner has been raised by the outward movement of the plunger, the word "Locked" will appear at the slot in the case, indicating that the operator has unlocked the signal at the preceding station, and that his own unlocking mechanism and lever-locking mechanism are

Digitized by Google

locked and cannot be shifted. When the banner has dropped to the intermediate position, as it will do when magnet 46 is cut out, the words "Train in block" will appear at the slot, thereby indicating that the train has passed the preceding station, and warning the operator to ask the next succeeding station to unlock his signal.

The circuit for the magnet 9*b* at station B is formed by the wire 99, make-and-break mechanism *l* (armature of track relay 14*b*) wire 100, binding post 44, wire 43, springs 39 and 40 (*f*), wire 45, magnet 46, wire 50, springs 51 and 52 (*h*), wire 54, binding post 55, wire 101, battery 102, wire 103, common wire 19, and wire 104 to opposite pole of magnet 9*b*.

A train having arrived at station B, the operator asks C to unlock his lever in order that signal 3*b* may be cleared. The operator at C thereupon pulls out the plunger 30, thereby, through the medium of the angle piece 37 (Fig. 4) and arm 38, so shifting the rock shaft 35 that the dog 32 drops and rests upon the plunger. The same movement raises arm 61, engages spring pawl 59, on the corner of armature 57, and so shifts arm 53 as to force the spring 51 into contact with 52. This, at *h*, completes the cautionary circuit, consisting of the battery 102, wires 103 and 104, springs 105 and 106, forming make-and-break mechanism *m*, wire 107, binding post 49, wire 48, resistance coil 47, springs 42 and 40 (*g*), wire 45, magnet 46, wire 50, springs 51 and 52 (*h*), wire 54, binding post 55 and wire 101 to opposite pole of battery. As stated, this circuit is closed so as to hold arm 61 up through the medium of magnet 46, provided *m* is closed. This make-and-break mech-

Digitized by Google

anism *m* is so connected to the locking finger 7*c* (signal lever 1*c*) as to be closed only when the finger has dropped into locking position in front of 4*c*; and, as before stated, the finger can assume this position only when signal 1*c* is locked in the normal position. If this cautionary circuit could not be closed by the movement of the plunger, so as to hold the arm 61 up, this arm would, when the plunger is released, drop back until arrested by the stop 66 on the arm 65, and thereby permit a hook, 108, to drop and engage a shoulder, 109, on the plunger. This hook, which is held out of the line of movement of the shoulder on the plunger by arm 38, when the arm 61 is held up, will, when released, as stated, prevent such a return movement of the plunger that the projection on the dog 32 can drop into the opening in the plunger. As such downward movement of the dog as is produced by the entrance of the projection 33 into the opening of the plunger is necessary in order to close the circuit through the lever-locking magnet 9*b*, it is evident that the cautionary circuit through *m* must be closed (and this is possible only when the lever 1*c* is locked at normal position) before C can unlock B.

If the lever 1*c* is locked in normal position, the cautionary circuit will be closed by the outward movement of the plunger, and magnet 46 will hold up arm 61. While 61 is held in this position, arm 38 will hold up hook 108 out of the path of the stop 109 on the plunger, so that the plunger can be returned to its normal position by its spring when released by the operator. The return of the plunger to normal position allows dog 32 to drop; arm 32*a* will then press spring

Digitized by Google

39 against 40, and also press spring 40 away from 42. Thus the dropping of dog 32 not only locks the plunger, but also completes the unlocking circuit through magnets 46 and 9*b* at *f*, and breaks the cautionary circuit through 46 at *g*. It will be observed that the breaking of the cautionary circuit is dependent upon the prior completion of the unlocking circuit, so that the arm 61 is not released from the pawl 59 by the break in the cautionary circuit, but will be retained in position by the closure of the unlocking circuit, until said circuit is broken as hereinafter stated.

The operator at C having by the outward pull and release of the plunger closed the unlocking circuit through magnet 9*b*, the locking finger 7*b* is raised, so that the operator at B can shift his lever and clear the signal 3*b*, permitting the train to pass on toward C.

The movement of the lever at B in clearing the signal breaks (at *b*) the unlocking circuit to station A, so that the signal at A cannot be cleared until B returns his lever to the normal position, and mechanically locks it there, although the unlocking circuit to A may be otherwise complete.

A short track circuit is placed in the track between the stations B and C, preferably near the station B, as indicated at F, in which is included the relay 14*b*. As the train enters upon this track circuit, this relay is opened, thereby breaking the unlocking circuit (at *l*). This break permits armature carrier 56, the magnet 46 being demagnetized, to swing out, thereby releasing arm 61, which then swings down to the intermediate position. This downward movement of 61 and consequent rotation of the rock shaft 35 will so move the

Digitized by Google

arm 91 as to allow springs 88 and 89 to come together, they having been separated when 61 was raised; and the upward movement of arm 34, which is not sufficient to raise 33 from the opening in the plunger, will so shift arm 32*a*, that 40 and 42 will again come into contact. These contacts at *g* and *k* are completed without breaking the contacts at *f* and *h*.

As the train approaches station C, it enters upon the track circuit indicated at E, thereby cutting out the relay 14*c* and breaking (at *n*) the circuit through 114 and 141*c*, and at the same time completing a circuit through point 112, wire 113, binding post 72, wire 71, magnet 62, wire 70, binding post 55, wire 101, battery 102, wire 103, common wire 19, wire 114, and armature 110. By the closure of this circuit the armature of 62 is attracted, shifting arms 64 and 65; stop 66 is lifted, arm 61 drops, 67 checks it, and spring 74 is shifted into contact with 73, thereby closing a retaining circuit through the magnet 62. This retaining circuit runs through 73, 74, wire 75, binding post 76, wire 115, contact point 116 and spring 117 (*p*), wires 118 and 103, battery 102, wire 101, binding post 55, wire 70, magnet 62 and wire connecting the other pole of the magnet with contact point or spring 73.

The signal 3*c* is preferably located about midway of the track section E, so that the main circuit through magnet 62 completed by the entrance of the train section E will not be broken by the passage of the train off the section until the train has passed by the signal. In clearing the signal for the onward movement of the train, the retaining circuit through magnet 62 is closed at *p*, and it is closed at *i* by the train. The retaining

Digitized by Google

circuit having been closed by clearing the signal, it will remain in that condition until the signal lever has been shifted and locked in normal position, thereby through the medium of the sector block, forcing the spring 117 away from the point and breaking the retaining circuit.

While arm 61 is held up by stop 67, the banner is held in such position that the words "Train in Block" appear to the operator, a train being considered in the block between B and C until it has passed off of the track section E, adjacent to signal 3*c*, and the latter shifted to normal position. As stated, the passage of the train off of the track section E breaks the main circuit through magnet 62 at *o*, and the locking of the signal lever 1*c* breaks the retaining circuit through the same magnet, thereby releasing arm 65 so that it will drop down, releasing arm 61. The banner then drops and shows "Free" to the operator, indicating that he is now at liberty to unlock the signal at B. The downward movement of arm 61 not only raises the dog from the plunger and permits spring 39 to move back out of contact with the spring 40, but also so shifts arm 53 as to permit springs 51 and 52 to separate, or assume normal position.

As in the cases of stations A and B, the magnet 9*c* must be excited so as to lift finger 7*c* out of the path of the sector block. The circuit of this magnet consists of the wire 119, make-and-break mechanism *q*, common wire 19, wire 103, battery 102, wire 101, connected binding posts 55 and 86, wire 85, springs 83 and 84, wire 87, springs 88 and 89, binding post 90 and wire 122. It will be observed that the make-and-break

Digitized by Google

mechanism *j* of this circuit is controlled by magnet 80, so that the circuit of this magnet must be closed before the circuit of 9*c* can be completed. The circuit for the magnet 80 consists of the wire 94, binding post 95, wire 123 extending to the unlocking and indicating mechanism at station D, binding post 124, wire 125, springs 126 and 127 (*r*) wire 128, magnet 129, wire 130, springs 131 and 132 (*s*) wire 133, binding post 134, wire 135, battery 136, wires 137 and 138, contact points (*t*) wire 141, contact point and armature 142 and 143 of the relay 14*d*, wire 144, common wire 19, extending back to station C, wires 103 and 118, contact spring 117, point 145, wire 146, binding post 93, and wire 92; or from common wire 19 the current may pass by 114, 110, 111, wires 141*c* and 146, binding post 93 and wire 92 to magnet 80.

The operator at C having asked the operator at D to unlock his (C's) signal lever, the operator at D will pull out plunger 30, thereby throwing up arm 61, so that its crossbar 60 will engage the spring pawl 59 and be retained thereby, provided that the cautionary circuit at D is closed. This circuit consists of the battery 136, wires 137 and 147, springs 148 and 149 (*u*) wire 150, binding post 151, wire 152, resistance coil 153, contact springs 154 and 127 (*v*) wire 128, magnet, 129, wire 130, contact springs 131 and 132 (*s*) wire 133, binding post 134 and wire 135. The cautionary circuit must be closed so as to hold magnet 129 closed and prevent the dropping of arm 61, and consequent lifting of dog 32. As before described, *s* is closed by an arm on the shaft 35, which is rotated by the plunger when pulled out. The return movement of the plunger will permit dog

Digitized by Google

32 to drop and press spring 126 against 127, thereby closing the circuit through magnet 80 at station C. The closing of this circuit so shifts the armature 79 (Fig. 7) as to press the springs 83 and 84, thereby closing, at *j* (Fig. 1*a*) the unlocking circuit through 9*c*, and also shift the miniature signal 82 to clear, thereby indicating to operator at C that the operator at D has done his part toward unlocking lever 1*c*. Having received the indication that the unlocking circuit is closed at *j*, the operator at C presses upon the pin 155 in the floor, thereby closing *q* in the unlocking circuit. The closing of the circuit through magnet 9*c* lifts the finger 7*c*, and the operator at C is now free to shift his lever to clear the signal 3*c*.

The signal must, of course, be cleared to authorize the train to pass off of section E, and hence banner 97 will not drop to indicate "Free" until after the train has passed off of section E, and the signal 3*c* is restored to normal. As soon as the banner indicates "Free" the operator at C is at liberty to pull plunger 30 and unlock the signal lever at B so as to permit a train to enter the block between B and C.

It will be observed that the make-and-break mechanism *k* (springs 88 and 89) in the unlocking circuit of magnet 9*c* is opened by the movement of the rock shaft when C pulls out the plunger to unlock 9*b*. This makes it impossible for the operator at D to unlock C until by the passage of the train over track section F at station B, the rock shaft at C is permitted to rotate back sufficiently far to close *k*. The interposition of *k* in the unlocking circuit renders it impossible for all the operators along the line to unlock each other and set

Digitized by Google

their signals at clear; for although C may shift his plunger to unlock B, he at the same time opens his own unlocking circuit at *k*, so that although D may slrift his plunger to unlock B, he at the same time opens his own unlocking circuit at *k*, so that although D may shift his plunger to unlock C, the latter's unlocking wire (broken at *k*) will remain open until the train has passed over track section F.

Where there is a siding between two stations, with entrance as indicated at S in Fig. 1, it is necessary to provide means whereby a train at B may pass into the siding beyond the signal 3*b* and the track section F, without so locking up the unlocking and indicating mechanism at C, as to prevent the operator at C from unlocking B, after the train has entered the siding. As before stated, the passage of a train over track section F, breaks the unlocking circuit of B at *l*, and, the plunger 30 at C having been pulled out and released to unlock B, is on its return so locked by the dog 32, when the unlocking circuit is broken at *l*, that it cannot be unlocked, except by the passage of a train over the track section E. Hence it is necessary to provide means whereby the unlocking circuit from C to B, may be kept closed while a train is passing over track section F and entering the siding. This result is effected by means of a shunt circuit consisting of the wires 156 and 157 connected respectively to the wires 19 and 100 of the unlocking circuit and the make-and-break mechanism at *w*. This mechanism (*w*) is arranged to close when the movable rails of the siding are shifted to permit the entrance of a train to the siding. With this shunt circuit the unlocking circuit will be held

Digitized by Google

closed while the train is passing over track section F, and hence the unlocking and indicating mechanism will not be locked.

The orderly movements of the several parts of the unlocking and indicating mechanism at D occurs as described in connection with the mechanism at C. The several circuits and make-and-break mechanisms described as before at C are also found at D, and at each block station along the line of the road.

To make the description more easily comprehensible we may now omit the references to the circuits and connections, and briefly review the operations which a signalman, say at C, performs in connection with the passage of one train. First, he must unlock B. This he does by pulling out the plunger. This lifts 61 and closes the cautionary circuit at *h* (which circuit, however, he does not complete unless his own lever 1*c* is locked normal, holding *m* closed) to hold up 61. Arm 61 being held up, the plunger is immediately pulled in by the spring. This lets the dog drop into the hole, locking the plunger, closing *f*, and opening *g*. (Opening *g* opens 46, but not until after 9*b* is closed). Closing *f* closes 9*b* and unlocks B's lever 1*b*. This lever being then pulled, the train may proceed. As the train passes F it opens *l*, thus opening 9*b* and 46. Arm 61 then drops one stage, closing *k* and *g* (*f* and *h* still remain closed), and showing the words "Train in Block."

C having cleared his signal (by co-operation of D) the train comes on past 3*c*. At E it opens *n* and closes *o*. This closes 62 and arm 61 drops one more (short) stage. At the same time the retaining circuit is closed

Digitized by Google

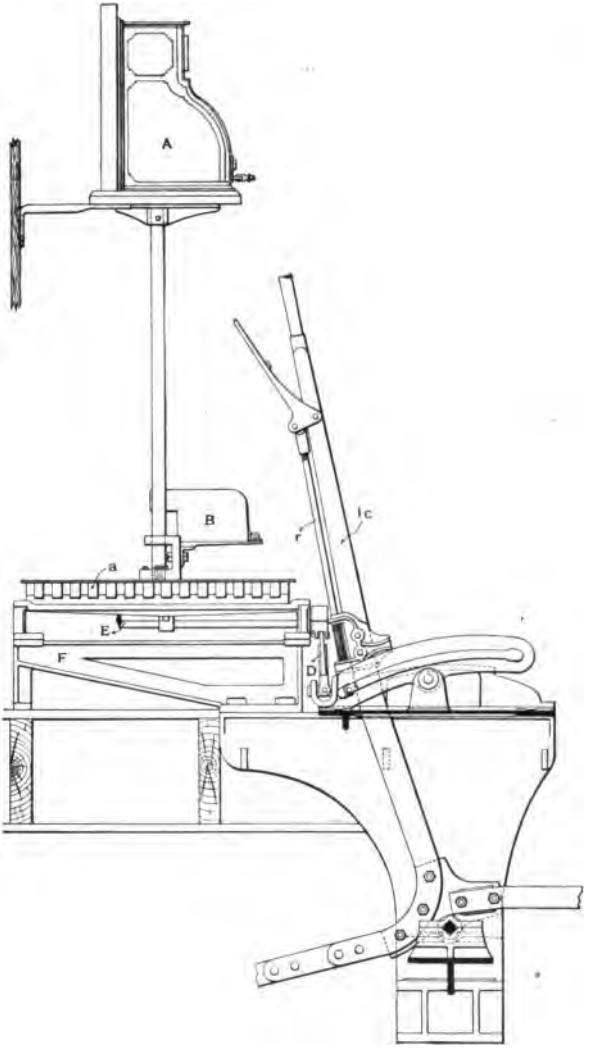

Fig. 20.—Signal Lever with Mechanical Interlocking and Electric Lock

Digitized by Google

through 62 at *i*. This circuit was closed at *p* when the signal was cleared for this train. After the train has passed, *n* is closed; and the signalman returns lever 1*c* to normal, opening the retaining circuit at *p*; this opens 62, releasing 65, dropping 61 and showing the word "Free," meaning that B may be unlocked for a second train. The dropping of 61 raises the dog and frees the plunger; it also opens *g* and *h*.

The co-operation of two signalmen in unlocking will be seen by reference to *q* and 80. When D plunges, closing *r*, he closes 80, closing *j*; this clears the miniature semaphore and notifies C to close *q* (with his foot); this closes 9*c* and unlocks 1*c*.

The opening of *k* by C, when he unlocks B, prevents D from unlocking C until the train passes F and closes *k*.

The drawings shown in Figs. 20, 21 and 22 show, in section, the signal lever and the electric slot used with the Coleman apparatus. As the frame in a cabin usually contains a distant signal lever, for each direction, and often a number of switch levers, the interlocking of these levers must be provided for, to insure that different levers shall always be reversed in the right order. The drawing, Fig. 20, shows a lever with part of an interlocking frame. The style of interlocking is the "Saxby & Farmer improved," as made by the Union Switch & Signal Co.

In Fig. 20, A is the case containing the principal electrical apparatus (See Fig. 19*a*) and B contains the electro magnet which directly controls the lever 1*c*. This electro magnet is shown in transverse and longitudinal sections in Figs. 20*a* and 20*b*. The letters in

Digitized by Google

Digitized by Google

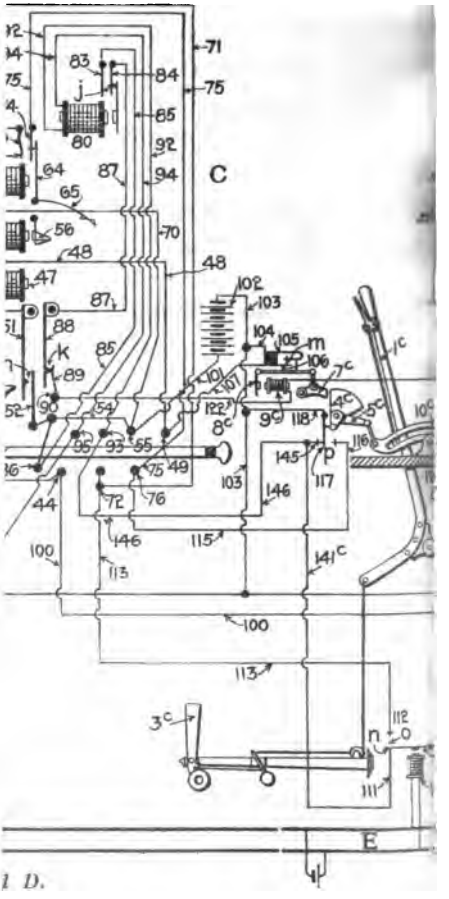

1 D.

TUS, AS USED ON THE PRO

Description

Digitized by Google

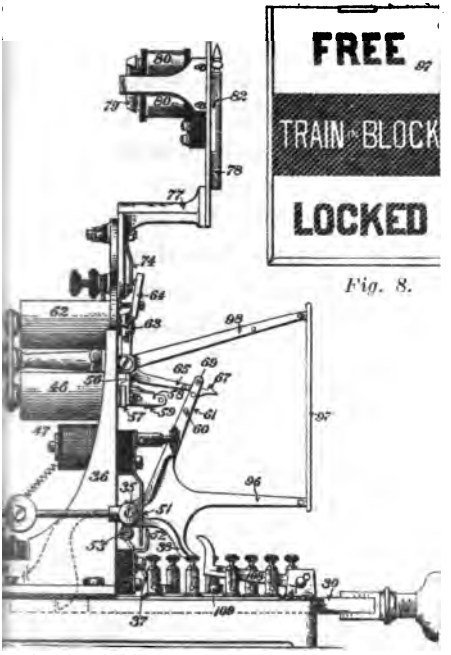

Fig. 8.

Fig. 3.—Side View of Machine.

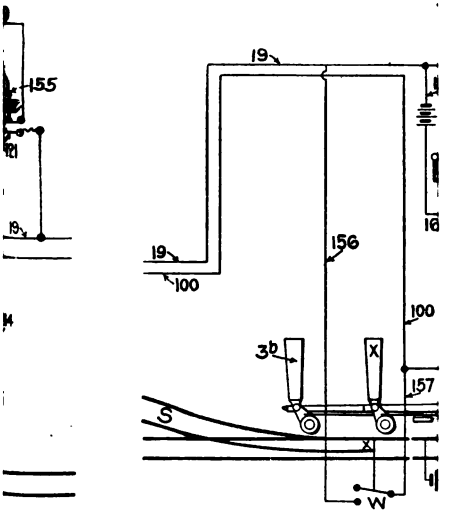

IDENCE DIVISION OF THE

page 62.

Digitized by Google

Digitized by Google

these sections, 4*c*, 7*c* and 9*c* refer to the same parts that are indicated by these letters in the foregoing description of the electrical connections.

The sector block 4*c* is controlled by the bar 7*c* dropping into the notch, as shown. A current through the coils of 9*c* lifts 7*c* out of the notch. The sector block controls the lever through shaft E^1 and link D. To move the lever, 1*c*, the signalman must lift the catch

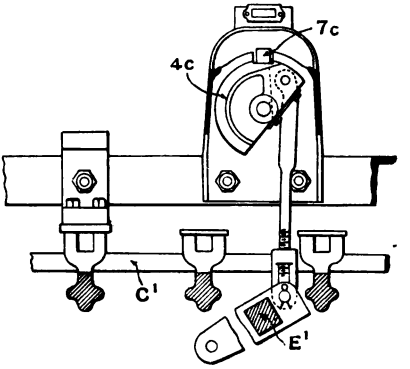

Fig. 20a

rod *r*, but in doing this he must revolve the shaft E, and this cannot be done as long as the shaft is held fast by the locked sector 4*c*.

The view of the shaft at E^1 shows, in part, how the interlocking is effected. The interlocking bars C^1 are supported at the back of the levers on frames *F*. The ends of these bars are shown at *b* and *c*. They slide longitudinally, and are actuated by horizontal transverse shafts E, E^1, when these are revolved on their

Digitized by Google

axes by the catchrod *r* of the lever, acting through the link D, D^1. A shaft, revolved on its axis by its lever, moves an interlocking bar by a short arm, and the sole function of the bar is to be pushed or pulled, a short distance, by the action of its lever catch-rod, so as to obstruct the path of some other bar. At a point where it is desired that the first bar, when pushed, shall obstruct the subsequent movement of the second bar, a

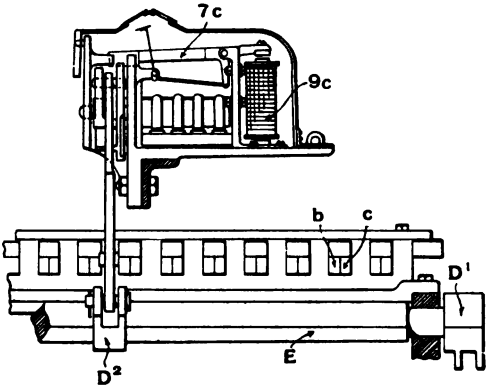

Fig. 20b

dog, with a beveled end, is fixed to the top of the first bar at the proper place to push a block athwart the path of the second. Blocking the second bar holds its shaft motionless, and this in turn prevents the lifting of the corresponding catch-rod and thus prevents the signalman from moving that lever.*

The "electric slot" is used to automatically set a sig-

* The interlocking machine is more fully described in connection with Fig. 47.

Digitized by Google

nal in the stop position immediately after the passage of a train so as to provide against forgetfulness or neglect on the part of the signalman. It is thus named because its function is similar to the well known slot in the vertical rod, long used in mechanical signaling in England, by which a signal, connected by wires or rods with two cabins can at any time be put at "stop" by either signalman without the co-operation of the other.

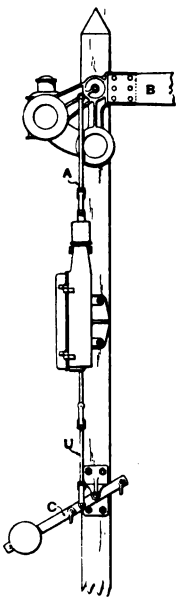

Fig. 22a

The electric slot is shown in Figs. 21, 22 and 22*a*. As will be seen from Fig. 22*a* the rod UA, which is moved upward to clear the signal, is carried through an iron box, fixed to the signal post between the signal arm B and the balance lever C. Referring now to Fig. 21, the frame K and the parts attached to it move up and down with the rod. The electro magnet M, when energized, keeps rods U and E rigidly connected and the signalman has full control of the signal. When the magnet is de-energized, the lifting of the rod U does *not* lift E and consequently has no effect to move the signal arm. Rod U is connected at its lower end to the balance lever and to frame K at J. Frame K supports the magnets, the guide K_1 (Fig. 22), spring L and bolts J and H. Lever G is pivoted to move radially on H. Spring T is fixed to the bottom of the case and presses against roller I, in lever G, normally holding

Digitized by Google

the latter in position shown. Roller N in lever G rests under pawl F, which is pivoted in rod E at X.

The centers H, N and X are normally (when signal operating lever is normal) out of line; any upward pressure applied at H consequently tends to move lever G to the left, on H as a pivot. This causes roller N to move out from under pawl F (which is not movable to the left) as a result of the resistance offered by the weighted signal pressing downward at X upon pawl F. When magnet M is energized, this movement sidewise of G is resisted at O, its upper extremity, as the link P pivoted thereto is held down by the armature R. Pivots S, Q and O are normally out of line, so that when M is de-energized any effort to move G to the left causes armature R to move upward (the pivot S being fixed) and consequently permits the roller N to move from under pawl F. But if the magnet M is energized its power is ample to hold R down; and to thus prevent the movement of roller N from under pawl F. Consequently, any upward pressure on U lifts the frame K bodily, with all members of the slot engaged as shown, and the signal is thereby cleared. Spring T being secured to the case, ceases to press against lever I, the instant this movement begins, and hence its normal tendency to force roller N under pawl F is not present when the signal is at "clear."

The upper part of the "slot" is so designed as to provide an air cushion for relieving the shock that would otherwise result when the signal returns automatically to "stop." Roller 3 is a guide, traveling on the inside of the cylinder, but not at any time touching the surface covered by the piston. When a signal has been

Digitized by Google

put in the all-clear position, all the movable parts, K, M, F, etc., are in the upper part of the case, and E, D, B, C, etc., are at the upper extremity of their stroke.

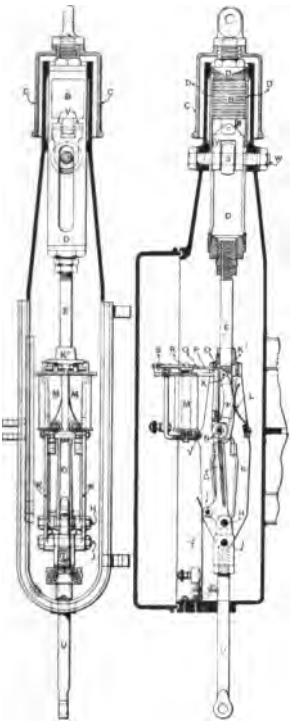

Figs. 21 and 22
The Union Electric Slot

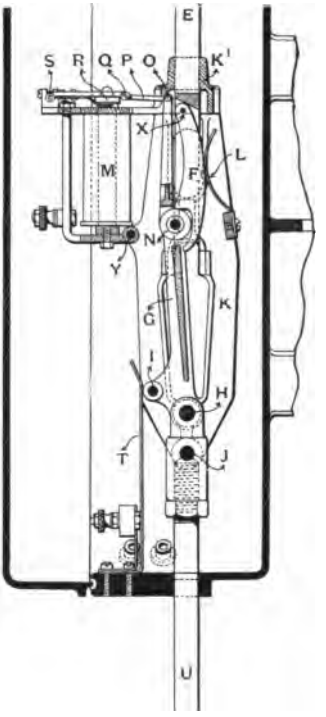

Enlarged Details of Fig. 22

Point I is free from spring T. Then, when a train passes, and, by shunting the rail circuit, opens M, the armature R is released and the weight of the signal, acting through the several members described, forces

Digitized by Google

the roller N out from under F. The rod E, with its attachments B, C, D, then drops by gravity, restoring the signal to the horizontal position. If now the signalman pulls rod U down again and attempts to clear the signal a second time (before M has been re-energized) he can push up U, J, N, M, etc., but this movement will have no effect on F and E, and the signal will remain in the stop position. When the train goes out of the block section at the next station, M is energized and the signalman's control over E and the signal is restored.

It is to be borne in mind that the Coleman apparatus is a development from earlier and less complete types. In the Sykes apparatus, as originally used, each lock instrument controlled the signal lever at its own station by mechanical means (rods) instead of by an electric lock. In Patenall's modification, used in the Fourth Avenue Tunnel, New York City, and on the main line of the New York Central & Hudson River Railroad (introduced in 1892), various additional safeguards of an ingenious nature are provided to meet what were deemed the peculiar conditions of the traffic in the tunnel, through which about 500 trains pass daily (on four tracks).

To provide for permissive signaling in case of failure of electrical apparatus the signals in the tunnel were made three-position. A single rod connection (pushed by one lever or pulled by another) serves for all three indications.

The electrical apparatus is modified by the introduction of a slide beneath the plunger whereby the signal lever is directly unlocked. There is an electrical switch

Digitized by Google

which keeps all metallic connections with the electro magnet normally broken, putting the same in circuit at the proper time. By leaving the slide pulled out the signal can be operated indefinitely (as for switching

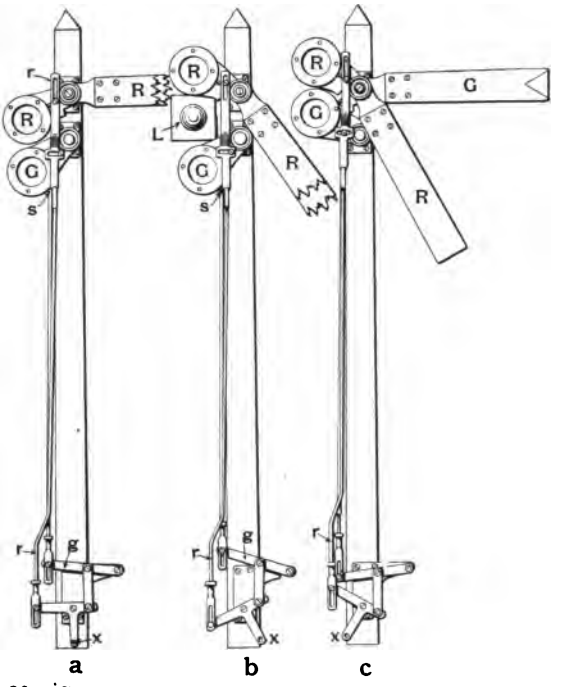

Fig. 23.—Semaphore for Permissive Block Signaling
Note.—R indicates Red; G indicates Green

movements) without affecting the electrical connections. The lamps are fitted with zinc and copper strips, which, by the action of the heat make and break an electric circuit so as to give a visual indication in the cabin, by means of an electro magnet, showing that the

Digitized by Google

light is burning. If the light goes out an audible alarm is given. At each home signal there is a torpedo machine, automatically placing a torpedo adjacent to the track when the signal stands at "stop," and withdrawing it when the signal is cleared.

In the tunnel the signals are disks, fixed to a vertical rod which turns on its axis. On that portion of the line between the tunnel and Mott Haven (about three miles) the three different indications are shown by a semaphore with two arms or blades, both turning on the same pivot. In this signal, which is shown in Fig. 23, both arms horizontal (*a*) indicate stop; both inclined downward (*b*) indicate all-clear, and the green arm horizontal while the red is inclined downward (*c*) indicates that the train may proceed, but with the understanding that the locking apparatus is out of order. The lever clearing the red blade cannot be pulled unless the block section is unoccupied, as the apparatus is controlled by a lock in a track circuit extending throughout the whole of the section. The term "permissive signaling" is therefore somewhat inaccurate. The view *a* shows the normal position. In *b* the green blade has been moved down by pushing up rod *s* attached to arm *g* and has carried the red blade down with it, there being a lug on the blade for this purpose. In *c* the red blade has been moved down by pushing up the outside rod *r*, and this rod, by its horizontal slot, has raised the green spectacle *G* to a position in front of the lamp. This green spectacle is not attached to any blade. Rod *s* working the green (rear) blade is not visible in the drawing above the point *s*. As before stated, pushing the connection *x* (to the right) clears

Digitized by Google

both arms, while pulling it lowers only the red arm. As shown at *c* the reversal of the green lever (to pull *x*) pushes up the auxiliary spectacle *G*; when the red lever is reversed (to push *x*) both arms are cleared and the auxiliary spectacle remains down. The lamp (imperfectly shown in *b*) is behind the red spectacle in *a* and behind the green in *c*. There is no glass in the grip of the green blade. The reversing of the green lever does not move the rod of the green blade nor does the red lever work the rod of the red blade.

On the Chesapeake & Ohio, single track, a modified form of lock-and-block instrument is in use for blocking in both directions for the same track and it has been adopted by the railroad as standard, 150 instruments being now in use.*

In this arrangement, which was devised by the late M. B. Leonard, Superintendent of Telegraph of the Chesapeake & Ohio, the operator at B controls the lever of the starting signal at A, the same as in other controlled manual block signaling. Referring now to station B, the arrangement of the signals and apparatus is as shown in the accompanying diagram. Fig. 24. (The line wire from station to station is not shown.) The road being single track, the sidings for eastbound and for westbound tracks are located as shown, the outlets of these tracks overlapping each other in front of the station or signal cabin. An electro magnet

*The Chesapeake & Ohio uses the electric train staff on certain short sections of single track, situated between sections of double track.

Digitized by Google

in the locking apparatus in the cabin is actuated by trains by means of a track instrument (*a*) in front of the cabin or by a circuit closer (*b*) at the western end of the eastbound siding. (The same arrangement exists for westbound trains, a circuit closer being placed at the east end of the westbound siding.) The signalman, to permit an eastbound train to come from A, "plunges" to unlock A's signal lever; and, having done so, his plunger remains locked until it is released by the arrival of the train. While B's plunger is locked the line circuit is open, so that A cannot clear B's westbound signal. This signal is controlled only by A's battery. The train either passes through and releases the plunger by closing the circuit at *a*, or else enters the side track. If it does the latter the switch, *c*, must be closed by the brakeman of the train as soon as the last car clears the derailing switch at *b*, and this operation, which simultaneously opens the derail at *b*, momentarily closes (at *b*) a circuit which releases the plunger.

To send a train forward, B, having been unlocked by station C, clears signal 2. This is done for a train starting from the side track, the same as for one passing on the main line. Clearing this signal breaks, at *k*, the circuit connecting the track instrument *a* with the cabin, and consequently the plunger cannot be released by a train passing on the main line, until the signal is restored to the stop position. This restoration is made by the signalman after the front part of a train has passed his home signal, and before the rear car passes the track instrument, so that the track instrument may

Digitized by Google

release the plunger and put B in a position to allow A to send on another train.

The requirement that the signalman shall restore his signal to the stop position as soon as a train has passed makes him vigilant in watching for the markers, and thus tends to provide an efficient check against giving a clear signal in case a part of a train has been broken off and been left in the block section.

In the case of a train entering the sidetrack, the duty of closing the switch *c* devolves on the man at the rear

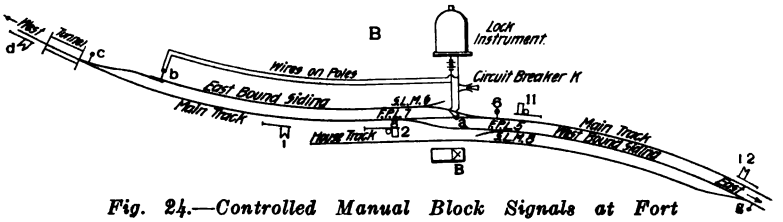

Fig. 24.—Controlled Manual Block Signals at Fort Spring, W. Va., Chesapeake & Ohio Railway

end of the train, so that there is no likelihood that the plunger will be released from *b* before the whole of a train has arrived.

The switches and signals which are numbered in the drawing are worked by a 12-lever interlocking machine in the cabin. The switches *c* and *g* and signal *d* are not connected with the cabin. The derailing switches marked S L M 6 and S L M 8 are worked by means of rods connecting with switches 6 and 8 respectively. The derailing switches (*b*) at the outer ends of the sidetracks are likewise connected with their respective main line

Digitized by Google

switches by a switch and lock movement. Signals 2 and 11 have indicators to show for trains to enter the side tracks.

On the Chesapeake & Ohio a train is never allowed to enter a block section before the preceding train has passed out of it, except by the issuance of a "caution card," which is a written order delivered to the engineman of the train; and signalmen do not issue these cards except by direction, in each case, of the train despatcher.

Digitized by Google

CHAPTER VI

THE CONTROLLED MANUAL SYSTEM—*Continued*

THE ELECTRIC TRAIN STAFF

The simplest, and probably the most certain arrangement for preventing butting collisions on single track railroads is the staff system, which has been used in England for more than 40 years. A train staff is a stick of wood about 20 inches long, brass bound, which is given to the engineman of a train to signify that he has the right to the road between two stations, the names of which are inscribed on the staff. Without a staff no engine can start from the station. A train running from A to B, with the staff for that section, gives up the staff at B and receives another one, giving it the right to proceed from B to C, and so on. To provide for cases where two or more trains must run from A to B before any train returns from B to A, there is with each staff a certain number of tickets, one of which is to be given to each of the several trains except the last. The last engineman takes the staff and all the unused tickets. If at any time the staff is at the wrong end of its section a train at the other end desiring to use it must be moved by a telegraphic order, or else the staff must be sent by a special engine or other conveyance.

If a staff were used alone, without tickets, it would provide against rear as well as butting collisions; and to make the system thoroughly adaptable to all circum-

Digitized by Google

stances Messrs. Webb & Thompson, of the London & Northwestern, devised the electric train-staff which was introduced about 1889, and which is now used extensively in England and Australia. It is used to a limited extent in this country, the Union Switch & Signal Company, proprietor of the American rights, having put in a number on the Chesapeake & Ohio, and a very few on other roads.

In this arrangement each of the two stations at the ends of a section of road has a pillar containing a magazine holding 10 or more staffs. With an adequate supply there is no necessity for tickets, and the pillars at the respective stations are electrically connected with one another, and so locked that, one staff having been taken out from either pillar, a second staff cannot be taken from either that or the other one, until the first staff is returned to one or the other of the pillars. Thus a second train cannot start from A until the first one has arrived at B and delivered up its staff. A staff always has on one of its ends a key to unlock the switches of sidetracks, if there be such tracks between the two staff stations. The staff, when used to unlock a switch, cannot be withdrawn until the switch is reset for the main track and locked.

It will be observed that the common staff makes no use of the telegraph, or of electricity in any shape, and that both the common and the electric can be operated without the ordinary signals on posts, for no engineman is allowed to leave a staff station without the prescribed staff, and if it is not duly delivered to him he will go to the station master's office for an explanation.

Digitized by Google

A perspective view of a staff pillar is shown in Fig. 501; and Fig. 502 shows the locking parts. The staffs are of metal and cylindrical. Each has four rings upon it, near the middle, to prevent it from being taken out

Fig. 501.—Staff Pillar

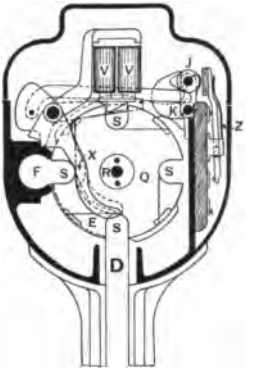

Fig. 502

except in the prescribed way. On the face of the instrument, at the top, are two dials, each with a knob and indicator, and, in the middle, a galvanometer. The latter shows, by indicating the presence of the electric current, when the lock is free, permitting a staff to be

Digitized by Google

withdrawn. Under the right hand dial is a small key for signaling to the other station by a bell, and also for closing the unlocking circuit to the other station. By turning the pointer on this dial the attendant may throw his battery to the bell circuit or to the staff circuit as required. The left hand dial indicates either "staff in" or "staff out." The single staff in the left hand or short slot of the pillar is a special one for permissive working. In the "permissive attachment" fixed horizontally to the front of the machine, are six tickets, and this permissive staff is the key by which the attendant gets at these tickets. The special staff, when thus used as a key, cannot be taken out of the permissive attachment until it is closed and locked, nor can the special staff be put into the pillar while one ticket is out.

Preparatory to sending forward a train the operator, say at station A, depresses the lever or key at the right (*K*, Fig. 502) which rings a bell at station B; B acknowledges by pressing his lever, ringing the bell at A. A gives the bell signal indicating that he wishes to start a train, and then turns his right hand dial indicator so that B's current will energize the magnets of the unlocking apparatus at A. B sends the current, and A lifts a staff through the slot D, E, F. The movement of the staff to the top of the vertical portion of the slot lifts arm X and thereby raises magnets V V, and they in turn lift the lock. The staff is then moved through E to F and taken out; and during this movement it automatically changes the right hand dial and puts the current back on the bell circuit. The operator at A then turns the left hand indicator to "Staff

Digitized by Google

Out," holding it for a few seconds, which opens the circuit and puts the galvanometers at both A and B to zero, which notifies the operator at B that A has taken out a staff. B then returns to its normal position the small lever he was holding down.

Where the machines at two stations are connected by a single line wire, both A and B having switched off their bells, the depression of the key *K* by B, as above described, sends a current either from the copper or zinc pole of his battery, according to the position of the commutator Z, which is reversed as a staff is put in or taken out of the column. In this case we shall assume that B sends a current from the copper pole of his battery. This current passes through both galvanometers, then through a polarized switch to the electric lock V V and thence to earth. A watches the galvanometer needle, and as soon as it moves over he withdraws a staff. The staff in its upward movement lifts the coils V V. These coils in rising unlock the disk Q and permit the staff to be moved through E to F, and thence withdrawn from the machine. The withdrawal of the staff turns the drum Q a quarter of a revolution and reverses the commutator from the copper to the zinc pole, consequently cutting off the copper current sent by B. The galvanometer needles in both machines fall back to zero, thus showing B that A has withdrawn a staff. A can now only send a current from the zinc pole, which has no effect on B's apparatus, and B can only send a current from the copper pole, which has no effect on A's instrument. As soon as the train has arrived at B and the staff is placed in the machine, the drum is turned back a quar-

Digitized by Google

ter of a revolution and the commutator reversed, thus switching the wire on to the zinc poles. Both A and B can now send and receive from the zinc poles, and consequently a staff can be obtained from either apparatus. The staff taken out again causes the commutator of the apparatus from which it was taken to be reversed, and the apparatus is thus placed out of unison again. The bell signals are given with alternating currents, thus avoiding any danger of a bell current affecting the electric lock.

The locking bolt of the electric lock being very heavy, a magnet and current of great power would be required to lift it through the space necessary. To avoid this the inventors have placed the poles of a comparatively small magnet normally in contact with the bolt, which forms an armature, and the magnet coils are lifted mechanically by the tail piece X, which is actuated by one of the projections made by the rings on the staff. Thus if a current is flowing through the coils the small magnet easily lifts the heavy bolt, but if no current is flowing the bolt is left unmoved.

The drum Q carries, besides the disk for electric locking, four other disks, three of which are for mechanically locking the drum after the manner of an ordinary lock, the staff with its rings being the key. This prevents any tampering with the apparatus. The five disks are mounted about 1 in. apart on a sleeve R, which rotates on the shaft passing through its center. The notches S, S, S, S, are in all the disks, and it will be seen that the removal of a staff rotates the whole. When a disk is returned to the magazine the disks are rotated in the opposite direction. The polarized switch

Digitized by Google

Z is similar to a Siemens relay, two tongues being used.*

If the number of trains moving in one direction continues larger than in the other it is necessary to carry a part of the staffs from one station to the other once a month or thereabouts, according to the volume of traffic. When the permissive staff is used, say from

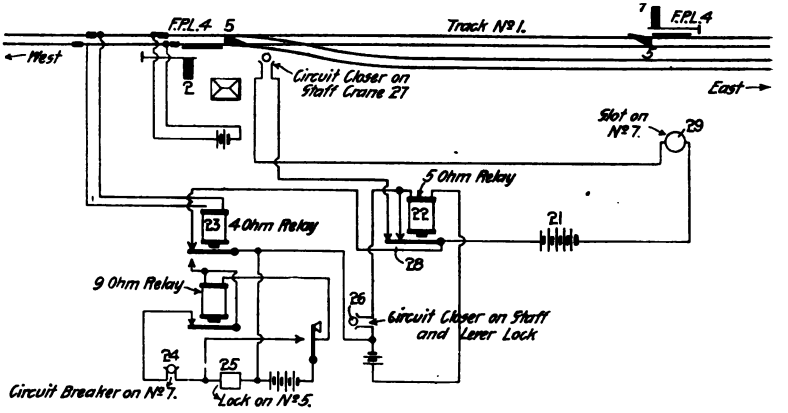

Fig. 503.—Electric Locking for Staff and Semaphore at Lowell, W. Va., Chesapeake & Ohio Railway

A to B, and is left at B, no further permissive movement is possible in the same direction until the special staff is returned. It can be returned, of course (with all its tickets) by any train.

On the Chesapeake & Ohio, a train entering on a section of the line controlled by a staff must first get

*The Union Switch & Signal Company is bringing out a new and improved design of train-staff and staff-pillar.

Digitized by Google

an all-clear signal from a semaphore; and the lever by which this semaphore is cleared can be unlocked only by the staff. The arrangement of wires for this purpose is shown in the diagram, Fig. 503, which represents the apparatus at Lowell, W. Va. Each home signal controls a distant, which does not appear in the drawing.

In the small cut, Fig. 504, is shown the upper part

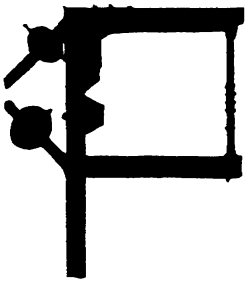

Fig. 504.—Staff Crane

of a staff crane, which, fixed at the side of the track, holds a staff in a vertical position, from which an engineman can take it while he is passing at from 15 to 25 miles an hour. When a staff is taken out the horizontal arms of the crane automatically assume a vertical position.

The action of the electric controlling devices shown in Fig. 503 is as follows: The operator having taken out a staff from his instrument unlocks lever No. 5, which works switch 5 and derailing switch 5. At the same time he closes, at 26, the circuit energizing the 5-ohm relay. He then pulls over lever No. 5, making

Digitized by Google

a clear passage for the train from east to west on Track No. 1, and takes out the staff. Taking out the staff opens the circuit at 26, but the 5-ohm relay is still energized, as a current flows through its coils, by way of the front point of the track, or 4-ohm relay. The slot circuit is now closed at 28. (The slot, at 29, must be energized to enable the operator to clear signal No. 7, for the train to proceed). After pulling lever No. 5 the operator places the staff in the staff crane, and when in position it closes (at 27) the third and last point in the slot circuit, energizing it so that signal 7 can be cleared. Signal No. 7 being cleared, the circuit on the electric lock through the 9-ohm relay is broken, locking lever No. 5 in the reversed position, so that the switch cannot be moved until the train has passed over the short track section just ahead of the switch.

The engineman of a train accepting the signal proceeds into the block section, and in passing the crane (at 27) takes the staff. The withdrawal of the staff opens the circuit on the electric slot, which puts signal No. 7 to the stop position automatically.

The train also de-energizes the 4-ohm relay by passing on to the track circuit. This opens the circuit through the 5-ohm relay, which stays open until closed again by the use of the staff as before described.

Signal lever No. 7 being put back to the normal or stop position, the 9-ohm relay is again energized; but lever No. 5 is held by its lock until the whole of the train has passed off the track circuit, and the 4-ohm relay is again energized, when lever No. 5 can be put normal.

With this arrangement it will be seen that the signal

Digitized by Google

cannot be given until the staff has been released, switches unlocked and set, and staff in position for engineman to take. And, when once the signal is given, the switch and derailing switch cannot be reversed until the train has passed over them. Should the operator find that he has made a mistake, and that a train must come from the west before he sends one west, he can resort to a hand release (in a box with a glass front, which he must break before he can use the release). The key of this box is kept by the inspector. This hand release is usually placed in the lower part of the signal tower so as to make the releasing movement as slow as possible.

Digitized by Google

CHAPTER VII

AUTOMATIC BLOCK SIGNALS

Automatic signals, actuated by the passage of the wheels of the cars and engines along the track, were tried in this country almost or quite as early as manual block signaling; and as the wages of competent men have been and are much higher in this country than in Europe the need of automatic apparatus was from the first felt more strongly here than in England. Consequently the automatic signals of the present day are the result of American development. In Europe they have not even been tried, except in a very few places. Thomas S. Hall, of Connecticut, began his experiments in 1866, and in 1871 had 16 miles of road signaled on the Eastern Railroad (now a part of the Boston & Maine). Rousseau's apparatus was in use at Philadelphia at the time of the Centennial Exhibition in 1876. These early inventors used track instruments or treadles which, pressed down by the wheels of a passing train, closed or opened the electric circuit in a wire carried on poles from one end of a block section to the other. Hall and his successors developed this method to a high degree of perfection; but wire-circuit signals, except the 16-mile section on the Boston & Maine, have been superseded by the rail-circuit, in which the rails of the track take the place of the wires; so that the oldest form of automatic signal which is still in general use is the clock-work apparatus of the Union Switch & Signal Company. The first important permanent installation of this was on the

Digitized by Google

Fitchburg Railroad (now a part of the Boston & Maine), from Boston to Waltham, Mass., in 1879-80, though Frank L. Pope had made experiments on the Boston & Lowell eight years earlier, and at Philadelphia in 1876 had worked a signal through a track submerged in water. Robinson's experiments were also important.

THE UNION CLOCK WORK SIGNAL

This signal is a disk, turned on a vertical spindle, by clock work moved by a weight. The arrangement of the signals and their relation to the track is shown in

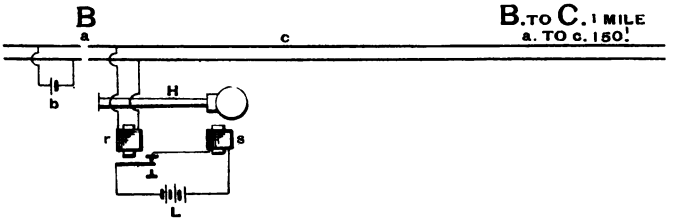

Fig. 26.—Automatic Block Signal Circuit

This diagram is continued on the next page

Fig. 26, in which the parallel lines represent the track. H and H C represent the signals. The block section extends from B to C. The rail circuit battery for this section is at b^1. When there is no train in the section this holds relay *r* closed, which, in turn, closes the circuit through the signal magnet *s*, which holds the signal in the all-clear position. The presence of a train in the section, or any metallic connection between the left hand rail of the track and the right hand, makes

Digitized by Google

a shorter path for the current and withdraws practically all of it from relay *r*, allowing its armature to drop, demagnetizing *s* and thus turning the signal to the stop position. The rail circuit, connected by wires, is carried through the rails of the side track at *v* for a short distance, so that a train entering the side track is protected, the same as when on the main track, until all of its cars are fully clear of the main line. The switch, or any number of switches in a block section, must be connected with the signal so that when set for the side track the signal will indicate "stop" to approaching trains. The rail circuit may be carried

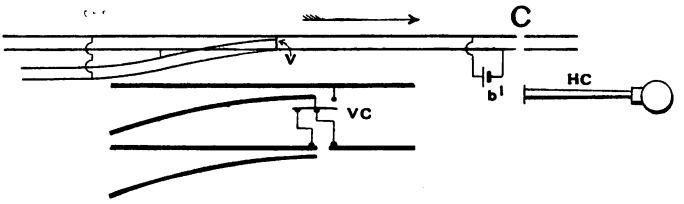

Fig. 26.—Automatic Block Signal Circuit

Continuation of the diagram shown on the preceding page

through a spring connection contained in a box at the switch, so that when the switch rails are moved the circuit will be broken on one side, and the signal turned to "stop." This arrangement is shown (enlarged at *vc*) in Fig. 26. Another method is to run the circuit from the local battery *L* direct to the switch, as shown in Fig. 27. With this arrangement the signal is controlled by the switch, even if the track circuit should be deranged; but if the switch is a considerable dis-

Digitized by Google

tance from the signal and the wires are run on poles there is increased liability to disturbance by lightning.

On some roads the signal, *H*, is set about 150 ft. within the block section, say opposite *c*, Fig. 26, so that the engineman as he enters the section at *a* can see the signal turn from all-clear to "stop" and thus be assured that it is in working order and that his own train is protected. The battery, *b*, in Fig. 26, furnishes the current for the section A B. A battery for a track circuit must be of low intensity on account of the poor insulation of the rails from the ground. It usually consists of two jars of the gravity type, kept in a well far enough below the surface of the ground to be free from the effects of frost.

Fig. 25

At each rail joint the two adjoining rail ends are connected by a bond wire to insure a good electrical connection, and at the ends of the sections as at *a* insulating material is put inside the splice bars and between the rails and around the bolts.

The appearance of the signal is shown in Fig. 25. The clock work is contained in the box immediately beneath the disk or target, and it is worked by a weight which hangs within the hollow iron post, 16 ft. high, which supports the signal. The target is fixed to the vertical axis supporting it, and when it is set so that its face is visible to the engineman it indicates "stop." For the all-clear indication it stands with its edge toward the train, or, as is the case on some roads, another target of a different shape, fixed at right angles

Digitized by Google

to this, indicates all-clear. The stop target is usually painted red and the all-clear target, when used, is painted white. Where a signal of this kind is used as a permissive signal, green is used in some cases instead of red. The lamp fixed to the top of the spindle has, in two of its sides, opposite to one another, red lenses; and in the other two sides white or green lenses, according to which of these colors is used to give the all-clear indication.

The vertical axis of the signal is connected by miter gears with a horizontal shaft having a ratchet wheel and a winding drum which are turned by the weight, as just explained. The horizontal shaft carries on one end a cross-head which has in its arms 4 pins so placed as to engage with a detent on the end of a horizontal bar pivoted near its middle, and having a slight motion up and down, at right angles to the axis of the winding drum. The horizontal bar is attached at its rear end to the armature of an electro-magnet and can engage one or another of the pins on the cross-head, according as it is in one or the other of its positions. The place of the pins is so chosen with reference to the detent on the horizontal bar, that when the armature at its rear end is attracted, and the bar is at its highest point, the disk will be held in the position indicating "all clear," but if the current ceases in the electro magnet, its armature falls away and the detent releases the clock work, which then turns one-quarter of a revolution, carrying the signal to the "stop" position. It is arrested by the detent engaging with the next pin on the cross-head. When the electro magnet is again energized the clock work makes another quarter revo-

Digitized by Google

lution and brings the signal again to "all-clear." The current through the electro magnet in the signal is controlled by the track circuit relay, as shown in the diagram, and this last is open or closed according as the block is occupied or unoccupied by a train. A broken rail, by interrupting the current through the relay, acts on the signal the same as a train.

Since the movement of the signal is dependent upon the clock work this must be wound at frequent intervals. That this may not be neglected and by chance leave the signal standing all-clear when the weight is run down, the current which operates the signal is made to pass through a pair of springs which are held together when the signal is wound up, but which are separated when the weight has nearly reached the bottom; so that just before the clock work is run completely down the circuit through the signal is opened and the signal left standing at "stop." Track circuit batteries must ordinarily be renewed about once in two months; the signal batteries will run longer.

In consequence of the imperfect insulation, rail circuits do not work well for a length of track greater than about one mile, and the most common length is shorter than this. Where it is deemed unnecessary to have the block sections so short as this a number of successive rail-circuit sections are connected one to another, so that the signals may be placed two or three miles apart. When this is done the circuit of one track section is opened and closed by a relay worked by the adjoining section. For example, if the point B, Fig. 26, were an intermediate point in a block section, the circuit made by battery *b* would be arranged to open

Digitized by Google

and close by the action of relay *r*. This can be repeated as many times as may be found necessary.

The Overlap.—The arrangement of distant signals in automatic systems, and the use of automatic signals on single track, will be taken up in a later chapter. Most of the early automatic block signals had no distants, and to avoid the necessity of requiring trains to slacken speed at the signals (as in case of fog) the "overlap" is used. The arrangement of overlap circuits is shown in Fig. 27. The block section *B C* is of the usual length, as in Fig. 26, but the rail circuit is divided

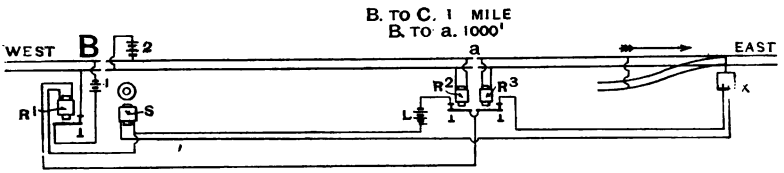

Fig. 27.—Rail Circuit With Overlap

into two parts, one from *B* to *a* and the other from *a* to the outgoing end. The signal magnet, *s*, is controlled by the relays (R^2 and R^3) of both these track sections, and of course will thus stand in the stop position as long as a train is on the rails of either section; and in addition to this the relay, R^2, of the overlap section, controls relay R^1, so that, until a train passes *a*, the signal at *A* (the beginning of section *A' B*, the next section to the west) remains in the stop position, thus keeping trains from approaching *B* until the preceding train has passed beyond *a*. The switchbox *x* con-

Digitized by Google

tains a circuit breaker, controlled by the switch rails, so that whenever these are set for the side track the signal at *B* will indicate stop.

No new clock work signals have been put up since 1894, as other kinds have been found more desirable. The enclosed disk signal, first extensively used by Hall, was early in the field, but until about 1893 it was used only with wire-circuits. The track-circuit was from the first in great favor because, aside from its other merits, it usually detected broken rails, and because its efficiency was never impaired or interfered with by the accidental breaking apart of a train. The electro-pneumatic system was brought out soon after the clock-work, but its progress was slower because of its greater cost. The most extensive installations of clock-work signals are those of the Boston & Albany, the Old Colony (New York, New Haven & Hartford) and the Boston & Maine. On each of these roads large numbers of these signals have been in use 10 or 15 years and more. The regulations for their use are quite simple. The essential clauses of the Boston & Albany regulations are as follows:

When the number has been placed on an automatic signal, it denotes that it has been put in operation, and should be observed under the rules.

Enginemen should notice that an automatic signal changes to danger when a train approaches within 200 ft. of an all-clear signal.

When a train finds an automatic signal at danger (that is, showing a red target or light), or if an all-clear signal fails to change to danger, its speed will be reduced to three (3) miles per hour, and [it will] proceed only as the way is known to be clear; but the signal must be reported as if causing a stop. If the number of an automatic signal is covered or erased, enginemen will proceed with caution through the section to which that signal applies.

Digitized by Google

A train need not stop at a signal which is not lighted; but it must be reported, unless the number is covered or erased.

Enginemen must report all stops on the proper blanks.

It will be observed that the Boston & Albany sets the signals 200 ft. in advance of the entrance of a block-section. This is to enable each engineman to know positively that the signal is in working order and has moved to the stop position, so as to protect his train. This 200-ft. arrangement is not universal with automatic signals. It is objectionable, at least theoretically, to have enginemen run past a signal which is in, or is moving toward, the stop position. Again, a signal might be moving to the stop position, just a second or two before the engine wheels entered the section, by reason of the misplacement of a switch; and the engineman would think that the movement was caused by his own engine. On the other hand, if the signal is arranged to move to the stop position after the engine has passed it, there is no check on its operation. A signal might be out of order and stand continually in the all-clear position and the engineman never know it. To have a brakeman or flagman on the rear end of the train watch the signals and record their movements is attended with some difficulty and has never been systematically undertaken. On railroads where the signals move to the stop position behind the engine, the officers assert that the design and construction of the signals and the efficiency of the care and inspection warrant the assumption that dangerous failures—failure of the signal to go to "stop" when a train enters the section—will not occur. The "normal-danger" arrangement, hereafter to be described, obviates some of

Digitized by Google

the objections to setting the signal behind the engine. It was formerly customary to require trains to be brought to a stop on encountering a signal showing red, or not in working order; but with suitable discipline the present Boston & Albany rule is found satisfactory. The same rule prevails on the Central of New Jersey, where automatic block signals of another kind are used. On the Lehigh Valley and the Pennsylvania the rule requires a train to stop one minute, and then proceed, expecting to find an obstruction. These three roads, unlike the Boston & Albany, have distant as well as home signals in their automatic systems.

Enginemen's reports of stops, are, of course, promptly examined, and if found to indicate any defect or derangement of signals are at once attended to by an inspector.

Trouble is sometimes experienced by using hand cars on tracks connected with clock-work signals, because the hand car will not always make a thoroughly good connection between the rails, and the signal operates to show danger or safety according as the circuit is repeatedly completed or broken by the hand car, and the clock work is entirely run down; it may happen therefore that the signal requires to be wound several times a day in order to keep it in service. This can be prevented, of course, by using hand cars with wooden wheel centers, but then the signal would never be operated by hand cars, and if one should be left on the track the signal would not give warning to trains.

The efficiency and reliability of automatic signals depends on constant and intelligent inspection and care. The number of failures of clock-work signals is ordi-

Digitized by Google

narily but a very small fraction of 1 per cent. of the number of operations, but nevertheless is probably larger than from other forms of automatic signals. A variety of causes may make the signal show "stop" when no train is in the block. A broken rail, a broken wire above or below ground, a bad connection or a broken spring in the switchbox, failure of the battery or of the relays, or the breaking of a battery jar; also, since the rails require to be bonded with a wire past the joints, a failure may be caused by a broken wire, or by rust in the holes in the rails; cinders on the track may also cause so great a leakage of current as to make the signals inoperative. Breakage of battery jars has been a great source of trouble, but this can be almost entirely done away with by using first-class material for these jars.

The worst failures of an automatic signal are, of course, cases where the signal should show "stop" but is actually standing clear. These are very rare and the record is constantly becoming better in this respect. The principal causes are lightning (in the summer), sleet storms (in the winter), fixed magnetism in the relay or the signal magnets, or the sticking or binding of some part of the clock work. Better mechanical work will eliminate most of the failures of the clock work: such as remain being due to causes inherent in the principle, and only to be gotten rid of by abandoning the clock-work altogether. A heavy rain in winter turning quickly to snow or sleet will sometimes stick all the clock-work signals in the position in which they happen then to be, and they will not work again until

Digitized by Google

set free by breaking away the ice or by moderation of the temperature.

THE ENCLOSED DISK SIGNAL

The distinctive merit of this signal is that the moving parts are protected from wind, rain, snow and ice, and therefore can be made light enough to be moved by an electro-magnet of moderate size. Thus the use of a more powerful force, such as the weight and clock-work, is unnecessary. The signals of this type made by the Hall Signal Company, are constructed on the same

Fig. 28.—Case for Enclosed Disk Signal

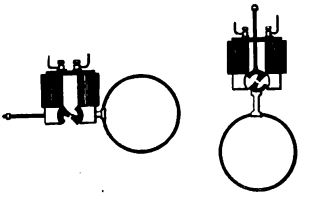

Fig. 29.—Hall Automatic Signal Magnet

general principle as those used by that company at first with wire circuits. The arrangement of circuits shown in connection with the clock-work signal (Figs. 26 and 27) is applicable to all automatic signals. The outward appearance of a wooden case for an enclosed signal is shown in Fig. 28. The case is supported on a post of suitable height, or on a bridge, and is usually painted a dark color. The disk, about 18 in. in diameter, made of silk or other light fabric, stretched on a

Digitized by Google

metal ring, or of aluminum, very thin, is fixed to the armature of an electro-magnet in the way shown in Fig. 29. When the block-section is clear and the signal magnet is consequently energized, the armature

Hall Signals on the Norristown Branch of the Philadelphia & Reading

holds the disk up, in the position shown at the left of Fig. 29; and the approaching engineman, looking at the glass-covered opening, sees the back of the interior of the case, which is painted white; this is the all-clear signal. On the withdrawal of the electric

Digitized by Google

current the disk drops by gravity to a position before the window (the armature and rod turning on the axis as shown), thus displaying a red, or stop, signal. For a distant signal a green disk is used. In the older style of signal the night signal is a lamp fixed at the back of the disk, outside the case, showing uncolored for all-clear and illuminating the cloth disk for the opposite indication. In the later designs the lamp is placed back of the smaller opening near the top of the case, and the upper end of the rod which carries the

Hall Disk Signals on the Illinois Central at Chicago—Eight Main Tracks

cloth disk (See Fig. 29) has fixed to it a small transparent disk, colored to correspond to the color of the day disk.

The Hall enclosed disk, shown in Fig. 28, is usually mounted on the top of a post or pillar, as before stated. Where home and distant signals are used, the cases are arranged as shown in the cut on page 119, which represents a signal on the Philadelphia & Reading Railroad in the Schuylkill valley. The upper signal has a red disk, and is the home signal, while the lower

Digitized by Google

one has a green disk, being the distant for the block section next beyond. This style is used also on the Lehigh Valley road. On the Illinois Central for a few

Union Enclosed Disk Signal (Part of Post Broken Out to Reduce the Height of the Cut)

miles out of Chicago, some parts of the line have four, six and eight main tracks. The arrangement of Hall disk signals on a bridge on this line is shown in the

Digitized by Google

cut on page 120. The latest design of the Hall Signal Company's signal instrument, described in connection with Fig. 29, is shown in perspective on this page. The lower disk, the daylight signal, is made of cloth (red for a home, and usually green for a distant signal); while the upper disk, the night signal, is made of thin glass, of the same color as the lower one.

The enclosed disk signal as described in connection

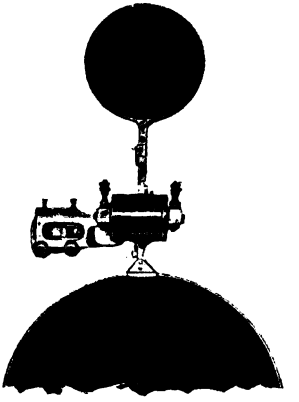

with Fig. 28 is now made both by the Hall Signal Company and the Union Switch & Signal Company. The Union Company's signal is shown in the illustrations on page 121. In this design the case is of metal (pressed steel). It is made very narrow, leaving room enough only for the disk, and the electro-magnet is contained in a box outside the main case. The joints of the case are caulked, making it airtight, so that the disk cannot be affected by moisture. The box containing the magnet is also tight, but can be unlocked by the repair-

Digitized by Google

man. The front and rear glasses are of heavy plate fixed in brass rings. The lamp is supported on hinges, so that it can be turned around to be cleaned and filled. The whole case and the parts supported by it are very light, important parts being made of aluminum, and it may be revolved on its bearings. With this arrangement the repairman can, while standing on the ladder, turn it around for cleaning or inspection, and if a signal is put out of service the case can be turned with its edge toward approaching trains.

Where it is desired to use green for the all-clear-color indication in the daytime the inside of the back of the case can be painted that color, so that when the disk is withdrawn the approaching engineman will see a green disk.

Enclosed signals may become obscured by damp snow sticking to the outside of the glass, and sometimes the rays of the sun, or light reflected from the sky, will make it impossible to see the color of the signal promptly on approaching it. These difficulties may cause delay to trains, but they cannot be called elements of danger, as a signal imperfectly displayed must, according to a rule which is universal, be regarded as a stop signal. The officers of the railroads using these signals do not seem to look upon these delays as very serious.

Digitized by Google

CHAPTER VIII

AUTOMATIC BLOCK SIGNALS ON SINGLE TRACK

The first important use of automatic signals on a single track road was on the Cincinnati, New Orleans & Texas Pacific. Three kinds of signals are there used, the clock work, the enclosed disk, made by the Hall Company, and a similar signal made by the Union Switch & Signal Company. (Described in the preceding chapter). On the line of this road from Cincinnati to Chattanooga there are 27 tunnels, and the signals were at first introduced in isolated sections for the protection of the line through these tunnels, but additions have been made from year to year so that now about 230 miles of the line is signaled. There are no distant signals, the overlap being used in all cases. The block sections are from one mile to 3.5 miles long. Trains in each direction are governed by the signals on the right hand side of the track as seen by the engineman. The overlap is in most cases about half a mile long, and its end is indicated by a white post, fixed at the side of the road, bearing the number of the signal controlled by that section. The beginning of each block section is also indicated by a post. This post is about 7 ft. high, and it bears at the top the words "Electric Signal Block," the signal itself being set 210 ft. within the block section, so that the engineman may see it move from the clear to the stop position.

The drawing, Fig. 30, shows a sketch of three consecutive block sections with the signals, wires and

Digitized by Google

batteries as they are arranged to protect trains from both rear and butting collisions. The letters A, B, C, etc., indicate the ends of the track circuits, not the block sections. The block sections are from A to C, from C to E, and from E to H. These letters are not spaced to scale, and parts of the rail lines and wires have been broken out to save space. The odd-numbered signals govern southbound trains and the even-numbered signals northbound trains. The successive positions of a series of signals as they are operated by a southbound train are shown in the following table, in which C means clear signal and R means red signal.

Signal Nos.:	7.	8.	9.	10.	11.	12.	13.	14.	15.	16.
A to B.....	R	C	R	R	C	C	C	C	C	C
B to C.....	C	C	R	R	C	R	C	C	C	C
C to D.....	C	C	R	C	R	R	C	C	C	C
D to E.....	C	C	C	C	R	R	C	R	C	C
E to F.....	C	C	C	C	R	C	R	R	C	C
F to G.....	C	C	C	C	C	C	R	R	C	C
G to H.....	C	C	C	C	C	C	R	R	C	R
H —	C	C	C	C	C	C	R	C	R	R

For example, a train in section C-D holds signals 9, 11 and 12 in the stop position. So far as the action of the signals is concerned, it is to be remembered that these three signals would stand in the stop position for a train in this section without regard to which way it is moving. The way in which a train protects itself may also be clearly understood by following the connections to one signal, say No. 9. The presence of the train in section C-D opens the relay D^1 by short circuiting practically all of the current from battery C^2. The dropping of the armature of D^1 opens the three

Digitized by Google

contact points, and it will be seen that the uppermost one of these opens a wire running, on poles, to signal 9. The same wire, it will be seen, runs through two relay points at B so that signal 9 may be similarly demagnetized by trains running or standing in sections A-B and B-C.

To illustrate the head end protection, consider a train going from E to D and beyond. When the first pair of wheels passes D, signal No. 9 is set at danger in addition to No. 11, which has been previously set.

In the table it will be seen that when a train enters section A-B it sets No. 9, Nos. 7 and 10 having been previously set; reaching section B-C, signal No. 7 is cleared and No. 12 is set; reaching section C-D, No. 10 is cleared and No. 11 is set, and so on from section to section.

The rules for the operation of automatic signals on a single track railroad are the same as those for a double-track road except in the important particular that in case of failure of any signal a flagman must be sent forward to guard against a butting collision. The rule of the C., N. O. & T. P. on this point is as follows:

"If the signal is red before the train enters the block or is white and does not change to red before the train reaches the signal it indicates danger and the train must stop; send a flagman in advance immediately; wait five minutes after the flagman has started and then proceed under full control, not exceeding six miles an hour, until the obstruction is reached or the train passes out of the block."

The flagman or rear brakeman of every train is required to observe the signals which control movements of trains running in the direction opposite to

Digitized by Google

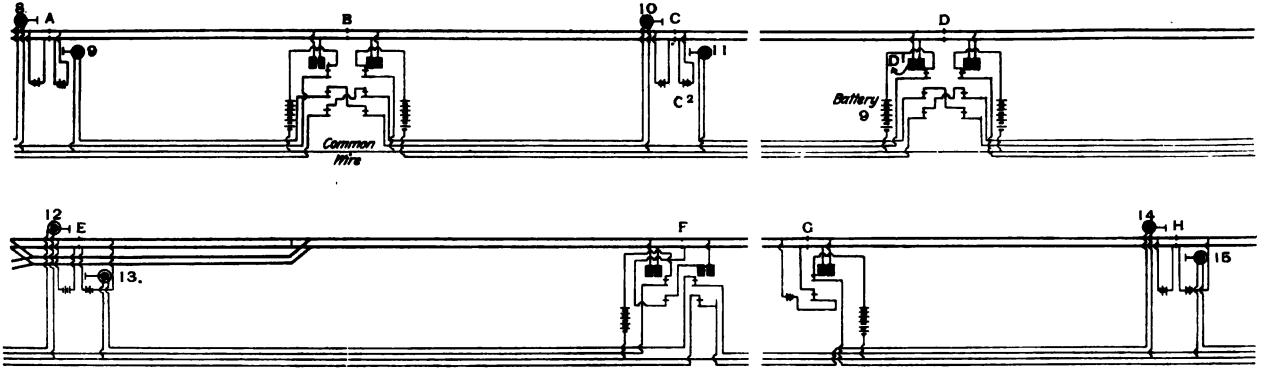

Fig. 30.—Electric Circuits for Automatic Block Signals on the Cincinnati, New Orleans & Texas Pacific Railway.

Note.—The lower half of the diagram is a continuation of the upper half, reading from left to right.

Digitized by Google

that of his own train, and to promptly report if such signals fail to clear when he passes out of the sections of track which they control.

To avoid unnecessary delays each passenger train carries in the baggage car a light three-wheel hand-car with which a brakeman can quickly run ahead of the train to the next block signal in advance.

Digitized by Google

CHAPTER IX

ELECTRO-PNEUMATIC AUTOMATIC BLOCK SIGNALS

Automatic block signals worked by the Westinghouse electro-pneumatic apparatus, are in use on the Pennsylvania, the Harlem Division of the New York Central, the Chicago, Burlington & Quincy, the Chicago & Northwestern and the Southern Pacific. On the Pennsylvania some of these signals were put up 16 years ago, and the company now has the whole of the main line of its New York Division and over 30 miles of the Pittsburgh Division equipped with them. These lines are all four-track. Other parts of the road are being equipped.

The interlocking machine and the pneumatic apparatus for moving switches are an important feature of the Westinghouse system; and block signals are worked in this way chiefly on very busy lines, where interlocked switches, and signals for switches, are numerous. In such a situation a single air compressor serves for the yard work and also for several miles of block signals, so that the cost per signal comes within a reasonable limit, whereas the expense of a compressor for the block signals alone might not be deemed warrantable.

The essential parts of the system are: (1) The battery, rail circuit and track relay and connections, the same as in the automatic systems already described; (2) the signal, a full-size semaphore; (3) a cylinder, with a piston, for moving the signal arm by compressed air,

Digitized by Google

and an electro-magnet for controlling the admission of air to the cylinder; (4) an air compressor (with reservoir and with cooling pipes to precipitate any excess of moisture) and a pipe laid along the side of the railroad, above or below the surface of the ground, to convey air under pressure to all the signals. There is a small auxiliary reservoir at the foot of each signal post. On four-track railroads the signals are arranged on bracket posts as in Fig. 4 (page 12) or on bridges as in Fig. 5. On the Pennsylvania, bridges are used in most cases, and the cut, Fig. 34, shows an iron-post signal designed to go on a bridge. In this signal each arm is arranged for giving two color-indications at night, having two spectacles. On the home signal one is fitted with red glass to indicate "stop" and the other with green to indicate "all-clear." The distant signal shows a green light for "proceed" and a yellow one when the arm is horizontal (indicating "be prepared to stop at the home signal").* In Fig. 33 the lamps (and counterweights) are not shown. The arms have each one glass, the go-ahead indication being given by showing no colored glass in front of the light. This is the Pennsylvania Railroad practice. Fig. 38 is an engraving from a photograph of a signal bridge on the Pittsburgh division of the Pennsylvania Railroad, where five tracks are signaled. The observer is looking west.

Where electro-pneumatic signals are used the block sections are usually short—not over 4,000 ft. long—and the distant signal for each section is placed on the same post with the home signal of the next section in the rear, as shown in the diagram Fig. 33. This

*See note on page 139.

Digitized by Google

diagram shows the condition of the signals, thus arranged, for three block sections: A to B, B to C, and C to D. There is a train in the middle section, but the other two are clear. The location of

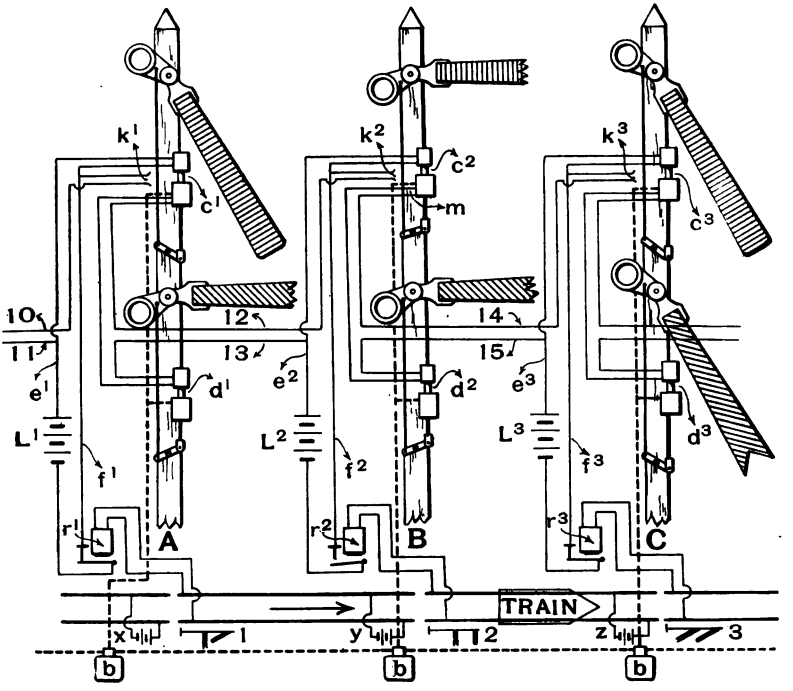

Fig. 33.—Electric Circuits for Electro-Pneumatic Block Signals

the signal posts A, B, C, is more appropriately indicated at 1, 2, 3.

The home signal arms, at the top of these posts, are moved to all-clear by the pistons in the cylinders c^1,

Digitized by Google

c^2 and c^3; and the distant signals are similarly moved through cylinders d^1, d^2 and d^3. Air pressure is supplied to the cylinders through pipes from the compressor, indicated by heavy broken lines, and this supply is controlled by valves moved by electro-magnets, worked through wires e^1 and f^1, e^2 and f^2, etc. These circuits, energized by local batteries, L^1, L^2, L^3, are opened and closed, as in all track circuit systems, by the relays r^1, r^2, r^3.

The action of the signals as affected by the passage of a train may be traced by beginning with section *CD*. This section being now free of trains, relay r^3 closes the circuit through the valve in cylinder c^3 and admits air, putting the home signal in the all-clear position. When the signal assumes this position it closes, at k^3, the circuit through wires 14 and 15 to cylinder d^2, controlling the lower arm at *B*, which is the distant signal for section *CD*. This signal, however, in the present case, remains in the horizontal position, because its circuit is held open at *m*, by the home signal at *B* being in the "stop" position. This break at *m* is provided so that an engineman approaching *B* may not be confused by finding a stop signal standing against him while the lower arm appears to give him permission to go on. A home signal, when it goes to horizontal, always causes the distant signal on the same post to do the same.

The presence of a train in section *B C* causes relay r^2 to remain open, and this leaves the home signal at *B* in the stop position. The circuit from battery L^2 being open, cylinder d^1 remains unchanged and the distant signal at *A* remains horizontal, corresponding

Digitized by Google

to the position of the home signal at *B*. The home signal at *A* indicates all-clear in response to its track circuit relay r^1, the track section here being clear, the same as at *C*.

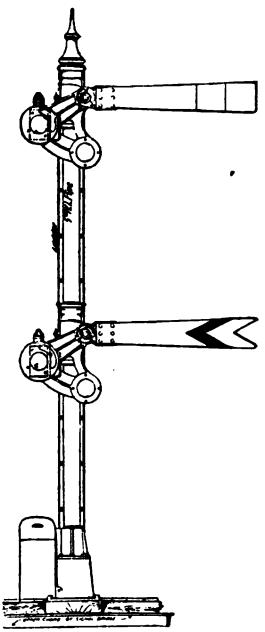

Fig. 34.—Two-Arm Signal, for Bridge; Iron Post

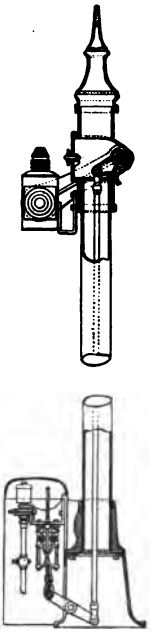

Fig. 35.—Sectional View Electro-Pneumatic Signal

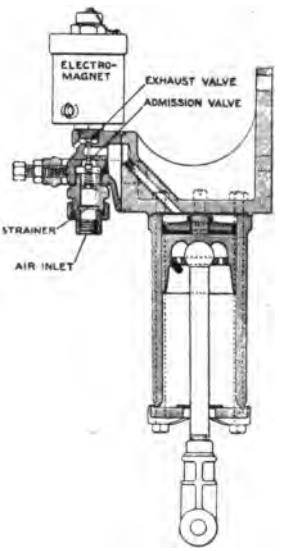

Fig. 36.—Electro-Pneumatic Signal Cylinder

In the latest installations of electro-pneumatic signals the wires from the home signals to the distants, 10, 11, 12, etc., are omitted, and the distant signal is controlled by a polarized relay, actuated by the track circuit, as explained below.

Digitized by Google

The track circuit relay most commonly used with these signals has its moving parts enclosed in a circular dust-proof box, with glass sides, the coils, with their cores, being placed in a vertical position on top of the box. A sectional view of this relay is shown in Fig. 37. The distinctive feature of this relay is the device for preventing the signal from remaining in the all-clear position in case the contact points at *a*, should become fused by lightning and remain stuck together.

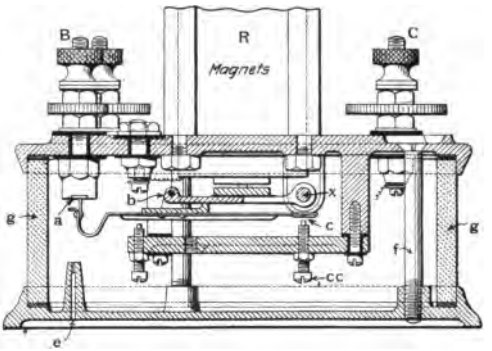

Fig. 37.—Relay for Automatic Block Signals

In such case *a* becomes the fulcrum and when the coils are de-energized, the lever *ac* drops at its right hand end, this being made possible by the introduction of the pivot at *b*. Connection is thus made at *c* and the local or signal current flows from the battery through *ac* and, by a wire connecting the screw *cc* with one of the binding posts at *C*, back to the battery, thus weakening the current through *x* to the signal magnet sufficiently to allow the armature of the latter to drop

Digitized by Google

away, and thus cause the signal to move to "stop," the same as though the circuit had been broken. In normal working the main armature lever, pivoted at *x*, moves up and down, carrying the bar *ac* with it the same as though the two were rigidly fastened together. The current flows from the battery through binding post *B*, contacts *a*, the armature, and thence, by a wire attached at *x*, to the signal magnet and back to the battery. If the points at *a* become fused, leaving the signal circuit closed, the demagnetization of the coils *R*, by the passage of a train, will not open the signal circuit, and the vital function of the relay is interfered with; but the withdrawal of the current from *R* allows the right hand end of bar *ac* to drop by gravity, as before described, and withdraw nearly all of the current from the signal magnet by making a shorter return to the battery.

The circular box which encloses the working mechanism has top and bottom plates of brass; and sides, *gg*, made of a ring of plate glass. By using the small hole at *e* the armature can be moved with a long needle. One of the screws, *f*, by which the case is held together, can be covered at the top with a wax seal, thus enabling the chief inspector to keep a record of all occasions on which the box is opened. The delicate parts being enclosed in the air-tight box, this relay can be used in battery wells or other damp places.

The armature pivots supporting the bar *x* have glass bearings. The screws supporting this bar at its ends are hollow; and the bearing, which is a short piece of cylindrical-shaped glass, is inserted in the end of the screw. This glass is about $\frac{5}{8}$ in. long; and to avoid

Digitized by Google

failure in case of fracture it is encased in a hard rubber thimble which is screwed on to the brass screw. The binding post connections of this relay are so arranged that the inspector can take out one of the coils without disturbing the other; and each coil can be tested separately from the outside.

The upper contact points of track relays can be either carbon or platinum. Carbon is used, where its conductivity is sufficient, to avoid fusing by lightning. The U-shape of the end of the armature, combined with its lightness, makes it sufficiently elastic so that, when it is drawn up, the contact point is made to slide on the carbon or platinum surface, which makes the connection self-cleaning. In two-point relays the contacts are balanced so that the pressure is equal on both, even if the adjustment be not the same.

The arrangement for working automatic distant signals without a line wire is quite simple. Each distant signal being on the same post with a home signal, the track circuit governing the home signal is made to govern the distant also, by means of a polarized relay; or, rather a combined simple and polarized. The relay opens and closes the local circuit for the home signal in the usual manner, without regard to the direction of the current, by means of an armature at the ends of the cores; but it closes the circuit for the distant only when the current flows in a given direction, an armature to be moved by the reversal of the direction of the current being added between the coils. This reversal is effected, of course, by the movement of the home signal at the next post in advance—the second block section in advance—which block section is the

Digitized by Google

one for which this distant signal gives indications. Referring to Fig. 33, relay r^2, for example, closes the circuit through c^2 in the usual manner, but when the home signal at C moves from the stop to the clear posi-

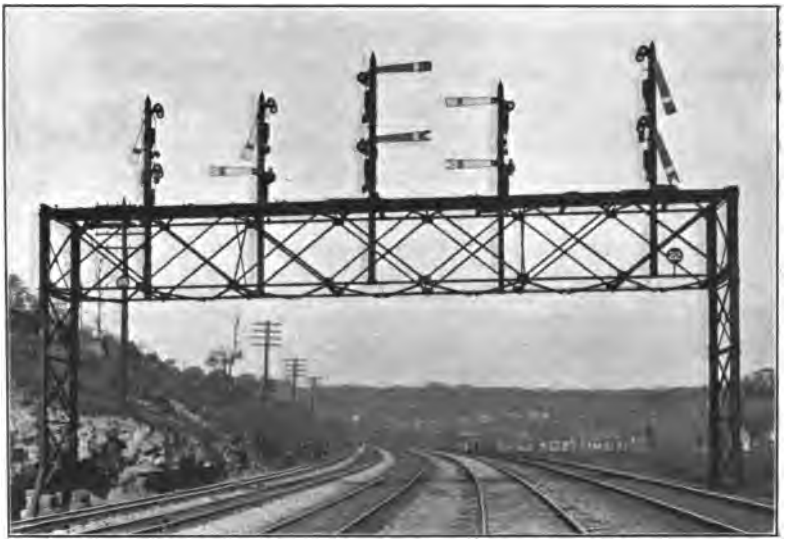

Fig. 38.—Signal Bridge on the Pennsylvania Railroad, Pittsburgh Division; Looking West

Note.—The tracks, beginning at the left are, No. 0, eastbound freight; No. 1, eastbound freight; No. 2, westbound freight; No. 3, eastbound passenger; No. 4, westbound passenger. It will be observed that the signals are of uniform height, the apparent differences being due to the short perspective, the bridge being 5 ft. wide.

tion, it changes the polarity of the track circuit from battery z, by a pole changer fixed to the signal post, and suitably connected to the track circuit, and thus

Digitized by Google

causes the polarized relay, which takes the place of r^2 to close a circuit through d^3.

When the polarity of the track circuit is changed there is a brief period of time during which there is no current flowing through the circuit. To prevent this from opening the local signal circuit the relay is so wound and adjusted as not to respond instantly to the withdrawal of the current; before the armature falls away the current is restored.

The signal shown in Fig. 34, which is the latest form, has a hollow iron post, and the rod from the cylinder to the arm is within the post. This arrangement is shown in the sectional view, Fig. 35. The cylinder, fixed at the foot of the post and covered by an iron box, is shown on a larger scale in Fig. 36. The weight of the rod within the post, with that of the spectacle casting, serves to throw the signal to "stop" when the air pressure is withdrawn, so that no other counterweight is needed.

Switches can, of course, be treated the same in this as in other automatic systems. Where mechanical semaphores are found, having been erected before the introduction of the block signals, as is often the case at large yards, circuit breakers can be fitted to the signal levers in the cabin, so that whenever the signalman prepares to move a mechanical signal to the "stop" position he will first cause the arm of the automatic home signal to assume the "stop" position. Any mechanical signal can be made to automatically indicate "stop" immediately after the passage of every train, by means of the electric slot already described (Figs. 21 and 22).

Digitized by Google

On the Pennsylvania road mechanical signals are usually changed, when automatic signals are introduced, to "semi-automatic." Cylinders are added to move them by air-pressure, and the signalman can clear them only while the main track is clear; though he can open the wire circuit and throw the signal to "stop" at any time. Those mechanical signals which govern movements off from the main tracks are left in the same condition as they were in before.

NOTE.—The arrangement of night signals shown in Fig. 34, and referred to on page 130—green and red on the home signal, and green and yellow on the distant—has been the practice on the New York, New Haven & Hartford for about two years, and is being adopted by a few other roads. The use of green for "proceed" relieves the engineman of the risk of taking a street or house light for an all-right signal. Yellow lights, to be always quickly distinguishable from common "white" lights, must be so dark as to look some like red, but this likeness to red is not found to cause any difficulty in practice. Even if a distant signal were to be taken for a stop signal no harm would ensue.

Digitized by Google

CHAPTER X

THE ELECTRIC SEMAPHORE

The electric semaphore is the latest development in automatic signals. The admitted deficiencies of enclosed signals and the objections to disks as less distinctive to the eye than the semaphore have led to many experiments with automatic apparatus for working full-size semaphores; and the semaphore worked by an electric motor is now in use on a number of roads. The peculiar advantage of this arrangement is that each signal has its own independent motive power, like the clockwork or the Hall, while yet the arm is full size and is moved by such a powerful force that it is unaffected by wind, snow or sleet.

The line of the Illinois Central between Dongola and Bosky Dell, Ill., 28 miles, double track, is equipped with automatic semaphore signals worked by electric motors and controlled by track circuits. The signal is moved from the "stop" to the "all-clear" position by an electric motor of $^1/_6$ h.p., which is supported on a bracket fixed to the side of the post below the signal arm. When released, the arm is returned to the "stop" position by gravity.

By an arrangement of electro-magnets and wires, presently to be described, the signals are arranged to stand normally in the stop position. The semaphores are practically identical in design with the ordinary standard semaphore, except that ball bearings are introduced to reduce the friction. Each block section

Digitized by Google

has a distant as well as a home signal, and each switch on the main track is provided with a vibrating bell which sounds, giving warning not to move the switch, as soon as a train enters the section in the rear of the one in which the switch is situated. Whenever a block section is clear (no bell ringing) a switch may be opened to connect a siding with the main track; and as soon as the main track is broken by the movement of such a switch the bell begins to ring, thus apprising the attendant that the signal at the entrance of the block section has been set to stop approaching trains.

To work a signal motor, from 10 to 16 cells of Edison-Lalande battery are used. The battery is placed in a box at the foot of the signal post. When the motor is run it winds up a cable, $\frac{1}{4}$ in. in diameter, which lifts the counterweight attached to the signal arm and thus causes the arm to assume the inclined or all-clear position. The motor has an automatic brake, consisting of a resistance coil which retards the revolutions of a soft iron circular disk fixed to the armature shaft.

The arrangement of the two signals, home and distant, controlling the entrance of trains to a block section, is shown in Fig. 31. The several rail circuits extend from A to B, B to C and C to D. The block section which we are now considering extends from C to D, say one mile. From B to C is about 1,800 ft., and from A to B the distance is about 1,200 ft. R_1, R_2, R_3, R_4 are track relays; M and M_1 are relays directly controlling the motor circuit; B_1 and B_2 are the batteries operating the motors, B_3 is the battery for operating the bells, and B_4 is the battery for oper-

Digitized by Google

ating the relays M and M_1. All the track relays are normally closed and the relays M and M_1 are normally open. The entrance of a train on the section A B shunts the track battery from track relay R_1, closing the path for battery B_4 through 12, thus energizing relays M and M_1. The energizing of relay M closes the front contacts on that relay, thus completing the circuit for battery B_1 through this contact and the home signal motor, thus pulling this signal to the clear position. A similar result follows with relay M_1, battery B_2 and the distant signal.*

When the home signal is in the clear position a circuit is closed through the circuit closer 13 (attached to the signal), battery B_3 and the bell magnets 14, 15, causing the bells to sound at these switches. Any or all switches in the section of track controlled by this signal would be connected in the same way.

When the train enters the section B C, relay R_2 is demagnetized, and the distant signal arm resumes the horizontal position, this being effected by the breaking of the circuit for battery B_2 through the opening of the front contact of this relay. The train entering section C D demagnetizes relay R_3, and the home signal resumes the stop position by reason of the breaking of the circuit of battery B_1 through the opening of the circuit through relay M, at 17. It will be noticed that

*In later installations, the distant signal B, instead of being cleared by the same current that clears the home signal, and simultaneously therewith, is made to depend for its movement on the prior clearing of the home signal. This is done either by running an additional wire from the home to the distant, or by the use of a polarized relay at B, to be worked by the track circuit, B C. The polarity of this track circuit is changed by the movement of the home signal.

Digitized by Google

the home signal is in the stop position and the circuit closer open; but the bells will continue to sound as long as the train is in the section C D, because a circuit is completed through the back contact point of R_3, battery B_3 and the bell magnet coils. When the train passes out of section C D all apparatus is restored to the normal position.

If, at the time a train passes A the block C D is oc-

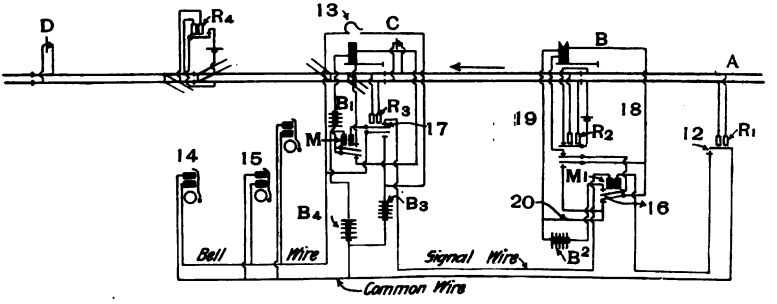

Fig. 31.—Electric Circuits for "Normal-Danger" Automatic Block Signals

cupied by a preceding train or car, or a switch is open, the demagnetization of R_1 by the action of the wheels has no effect on relays M and M_1, for the circuit of battery B_4 is held open at R_3 by the preceding train (or car); and consequently the signals remain in the horizontal position and stop the train at C.

The lower armature of relay M_1 when down—that is, when in the position that it takes when a train passes it and the signal at B goes to the horizontal position—closes a circuit through wires 18, 19 and 20. This circuit, which has no battery, runs through the

Digitized by Google

motor, and the office of the lower armature of relay M_1 is to close a circuit through the motor, outside of the motor battery, and thus aid in retarding the motion of the signal arm as it approaches the end of its stroke. The relation of relay M_1 to the motor is shown in Fig. 32. Relay M has connections to its motor similar to those of relay M_1.

If, while a train is between B and C, a following train should pass A, this second train, by holding M_1 closed, would prevent the closing of the no-battery circuit described in the preceding paragraph; to avoid

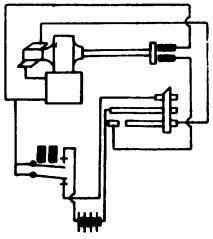

Fig. 32

this the dropping of the third armature of R_2, which is effected by the presence of the first train in the section B C, is made to close the no-battery circuit around M_1.

At stations and at all places where there are switches, an advance or starting signal is provided, so that a train having to stop at the station can be moved past the home signal while the block section to the next station in advance has not been cleared. With this arrangement the relative positions of the signals are as shown in Fig. 8, page 15, in which *b* is the home

Digitized by Google

and *s* the starting signal. At the station, between *b* and *s*, there is generally a crossover track, or a switch leading to a side track.

The signal arms being normally in their horizontal positions a train approaching the distant signal will, upon entering the preliminary section, A B, Fig. 31 (assuming that the track beyond the home signal is unoccupied), clear the distant, home and starting signals; but if the line beyond the starting signal is occupied the arrangement is such that only the home signal would be cleared.

Near Mountain View, Lackawanna Railroad

Semaphores worked by electric motors are made by both the Hall and the Union companies, and are used on the Lehigh Valley, the New York Central, the Baltimore & Ohio, the Delaware, Lackawanna & Western and other roads. One of those on the last-named road is shown on this page.

Digitized by Google

CHAPTER XI

THREE-POSITION AUTOMATIC BLOCK SIGNALS

One of the most recent installations of automatic semaphores moved by electric motors is that on the eastern division of the Pittsburgh, Fort Wayne & Chicago (operated by the Pennsylvania company), between Allegheny (Pittsburgh) and Homewood, Pa., 34 miles. In this arrangement, devised by Mr. W. M. Grafton, signal engineer of the road, the distant signal is done away with, and, by using the semaphore in three different positions, a single arm is made to serve the purpose of both a home and a distant signal.

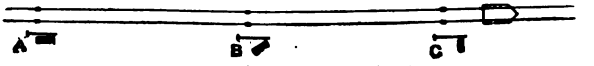

Fig. 39.—Three-Position Automatic Block Signals

The following description is from the *Railroad Gazette* of January 18, 1901.

The arrangement of the signals for three consecutive sections is shown in Fig. 39. The signal at the entrance of a section which is occupied by a train, stands in the horizontal position, as in the usual practice; but the signal at the entrance of the next section in the rear, which under ordinary practice would have two arms, one indicating all-clear for that section, and the other "caution" for the succeeding or occupied section, stands in the diagonal position. This indicates that the section immediately in front (B C) is clear,

Digitized by Google

but that the signal at the entrance of the next section (C D) may be expected to be found in the stop position. The signal in the vertical or all-clear position as at A indicates that two sections in advance, A B and B C, are clear. In speaking of these signals, the terms clear, caution and stop are used for the three positions shown at A, B and C respectively.

Each signal is controlled by the track section immediately in front of it by means of the track circuit in the usual manner; but the control of signal B, for instance, by a train in section C D, is effected by means of a wire on poles from C to B. The signals are worked by electric motors of one-twelfth h.p., one at each signal. There is a dynamo in the power house at Conway, 22 miles from Pittsburgh, which furnishes current for all of the signals, and in addition there is a storage battery at each signal bridge. On that portion of the road which is four-track, all of the signals are on bridges spanning the tracks. One of the bridges is shown on page 149. At all places where there are switches in the line, automatic signals are placed close enough to the interlocking to serve as convenient starting signals for trains which have passed through the interlocking.

The motor moves the signal arm by means of an apparatus analogous to the electric slot, and it is called the slot instrument. The track relay, by which trains control the signal, is connected as shown at 38, station *A*, Fig. 4*, S being the "slot" mechanism and M the motor. When the block section A B is clear 38 is

*See inset No. 2.

Digitized by Google

energized and holds up its armature; this energizes the slot magnet (12 Fig. 7, S Fig. 4) and locks the signal rod (5, Fig. 6) holding the signal in the all-clear position; the entrance of a train de-energizes 38 and 12, and thus unlocks the signal.

Before examining the action of this signal the functions of the different parts of the operating mechanism should be understood. The motor and "slot" are practically one machine, contained in an iron box, at the foot of the signal post. This machine was designed and patented by Mr. G. B. Gray, of Pittsburgh. Fig. 4 is a diagram showing the simplest arrangement of circuits for the signals for two adjoining block sections; Figs. 6, 7 and 8 show the operating mechanism of the signal, Fig. 9 is the signal, and Fig. 10 shows a detail.

As shown in Fig. 7, the connection from the signal to its operating mechanism is formed by a sleeve 5 and a rod 6, fitting within the sleeve. The sleeve forms a guide for the upper portion of the rod 6. The sleeve is provided with wings 8, Fig. 6, which serve as guides sliding in grooves formed in the uprights 8a of the frame of the machine. The sleeve and rod are locked together by locking block 9, which has a locking projection 10 (see Fig. 10), to engage with notch 11, in the rod 6. This rod moves freely through the block when the latter is not held in position by lever 16 controlled by electro-magnet 12, which is supported on sleeve 5. Links 15, 15, 16, 16, form toggle joints by which magnet 12, when energized, presses block 9 to the left; while, on the other hand, whenever 12 is de-energized the weight of sleeve 5, with that of the casting on

Digitized by Google

the signal arm is sufficient to force block 9 to the right, and thus unlock rod 6 and permit it to slide freely in the sleeve. The reader should remember that to move the signal arm down, the rod 6 and sleeve 5 have to be moved up.

The signal is shifted to caution and clear positions

Fig. 40.—Signal Bridge No. 28, Agnew, Pa., Looking East

by the electric motor, shown at the bottom of Figs. 6 and 8. The armature-shaft is connected by a train of gearing to shaft 19, carrying pinion 20. The teeth of this pinion engage a series of teeth on rod 6, and the rotation of the pinion thus lifts the rod and shifts the signal to the caution and clear positions. In order to permit the rod 6 to move down, after the signal has

Digitized by Google

gone to "stop," without reversal of the motor and its train of gearing, some of the teeth on the pinion 20 are removed; when the untoothed portion of the pinion comes opposite the rack on rod 6 the latter is free to drop.

In order to relieve the train of gearing and motor from the weight of the signal when in clear and caution positions the pawls 21 21a are mounted so as to project into the path of block 9 when it is in locking position. These pawls are so located vertically on the frame that when the signal has been moved down to caution or clear position the projecting end of block 9 will have moved just above one or the other of them, which will drop under the projecting end of the block, and thereby prevent any downward movement of the sleeve (= upward movement of the signal arm) so long as the block is held locked. Block 9 and the pawls 21 21a are so beveled that the weight of the signal and sleeve will have a tendency to move the block to unlocking position. Arm 23 is a lock for holding the signal in stop and caution positions so long as track conditions require such positions. It is mounted on the frame of the machine in such position that the hook on its end will engage notches 24 on the sleeve when the signal is in stop or caution position. The hook is shifted to engage these notches by spring 25, which is held in a position in which the sleeve will be free to move by a magnet 27, Fig. 8, controlled by train movements.

The drum shown at 28, Fig. 8, is a brake to prevent over-running of the signal-shifting mechanism when the circuit of the motor is broken, but this is not used

Digitized by Google

in the machines on the Fort Wayne road. When the brake is used its shoe is held away from the drum by means of electro-magnets 33, which are included in the circuit of the motor.

In order to prevent shocks to the mechanism when the signal is shifted, a cylinder 70, Fig. 8, constituting a dash-pot, is provided. Stem 72 of the piston is secured to the frame of the machine.

The motor circuits and the circuits for energizing the slot-magnet 12 are controlled by the movements of the signal, and to this end circuit-breaking mechanisms 34, 35 and 36, Figs. 4, 6 and 8, are so arranged as to be opened and closed in a certain pre-determined order. These lie in the path of a projection or rib 37, Fig. 8, carried by the sleeve 5. Circuit-breakers 34 and 35 are opened by the movement of the sleeve, while 36 is closed thereby. These circuit-breakers form a part of the motor-circuits, one of which consists, starting from the battery *p*, Fig. 4, of the wire 16, armature of relay 38, wire 6, circuit-breaker 35, wire 11, motor M; thence by wires 14 and 15 back to the battery. This is called the caution circuit, as when closed it moves the signal arm from the stop to the caution position. The other motor circuit, for moving the signal-arm from caution to clear, consists of battery *p*, wire 16, armature of 38, wire 6, circuit-breaker 34, wire 8, contact points 19 of relay 3P, motor M, wires 14 and 15 to the battery. Circuit-breaker 35 is closed when the signal is in the stop position. Circuit-breaker 34 of the clearing circuit is so located as to be closed as long as the signal is in either the stop or the caution position, but it will

Digitized by Google

be opened by rib 37 as soon as the signal reaches the clear position. Both of these motor-circuits are controlled by the track-relay 38, so that as long as the track-relay is de-energized the motor-circuits will remain open. The "catch-magnet" 27 is also de-energized, permitting spring 25 to press 23 against 5, so as to engage with one or the other of the notches 24. The signal-clearing circuit is also controlled by the relay 38′ at station B, the circuit of which consists, starting from battery *p′* at B, of wire 16′, contact points of 38′; wire 6′, wire 10, relay 3P at A, wires 13, 14, 15 and 17 to the common wire and thence by 17′ and 15′ back to the battery *p′*. As the circuit for clearing the signal at A is controlled by track-relay 38′ it cannot be cleared until relay 38′ becomes energized, and this cannot occur as long as a train is on section B C.

As the circuits for the motor are the same at each station, it will be understood that the signal at B will go to stop as soon as a train enters upon its section.

When rod 6 is raised as in Fig. 8, the teeth on the rod are engaged by only a few of the teeth of the mutilated pinion 20, and those adjacent to the mutilated portion. As soon as the slot-magnet is de-energized the sleeve 5 drops along the rod 6, carrying with it the slot mechanism. When the motor is energized the pinion 20 will be rotated in the direction of the arrow and its teeth disengage from the rack of the rod 6, which will then drop sufficiently far to bring the notch therein in line with locking-block 9. As the slot-magnet is energized simultaneously with the closing of the motor-circuit, block 9 will lock the sleeve

Digitized by Google

and rod together as soon as the notch comes into line with the block. By the continued rotation of pinion 20 the rod 6, and with it the sleeve and signal, will be shifted to caution position, where the circuit-breaker 35 will be opened, opening the motor-circuit and de-energizing magnet 27; catch 23 will then engage with the lower one of the notches 24, thereby locking sleeve 5 so that the signal cannot be shifted to clear; but will not interfere with its further movement to stop position. When the signal moves to stop, in the manner described, catch 23 will engage the upper one of the notches 24 and hold the signal in that position, the circuit of magnet 27 being broken.

Fig. 4 shows the arrangement of the electrical apparatus and wires at two adjoining signals or stations, A and B. The two signals 1 and 2 are shown in the all-clear position, as this section (A B), also sections B C and C D, are clear of trains.

We may now follow the movement of a train from A to B, Fig. 4. The entrance of a train at A to section A B (or the presence of a pair of wheels at any point on the track between *a* and *b*) provides a short circuit for the current from battery *a b* and de-energizes track relay 38. This breaks all circuits leading to signal 1 at A through wires 6, 8, 9, 11, 12, 13 and 14. Slot magnet S at A is de-energized, sleeve 5, Fig. 7, drops and the signal goes to the stop position. It is held in that position by arm 23 (engaging in upper notch 24) until the train passes out of the section at B.

When the train passes B relay 38 is again energized and closes the motor circuit, battery *p* wire 16, contacts 38, wire 6, contacts 35, wire 11, motor M, wires

Digitized by Google

14 and 15). The slot circuit is also closed, (battery *p* wire 16, contacts 38, wire 6, cut out contacts 36, wire 12, slot magnet S, wires 14 and 15). S and M being energized, and 27, Fig. 8, being also energized, the signal is shifted from "stop" to caution. When it reaches the caution position it separates the points at 35, and then opens the motor circuit. The signal is held in this position until the train passes out of block section B C. The sleeve 5 is held down by hook 23 engaging in lower notch 24, and it is held up by pawl 21a dropping under block 9.

When section B C is cleared, by the train passing C, relay 38′ at B is energized; and this energizes relay 3 P at station A by the completion of a circuit from battery *p′* by wire 16′, points of 38′, wire 6′, wire 10, relay 3 P, wires 13, 14, 15, 17 and back as before described. Contacts of relay 3 P now being closed, a new path is provided for the slot circuit from battery *p* by wire 16, contacts 20 of track relay 38, wire 6, wire 9, contact 18, wires 12 and 14, and wire 15 back to battery. The motor circuit is also closed from battery *p* by wire 16, track relay contacts 20, wire 6, cutout 34, wire 8, 3 P relay contact 19, motor M, wires 14 and 15 back to battery. The motor and magnet 27 being energized the signal is shifted from the caution to the clear position. When it reaches that position the motor cutout 34 is opened and the signal is held there by pawl 21, block 9 being pressed to the left by action of magnet 12. In the movement from caution to clear, cutout 36 is opened and the slot circuit passes through relay contacts 18 and wires as last described.

In case a switch in section B C should be opened, or

Digitized by Google

any break should occur in that track circuit, magnet 12 (S, signal 1, station A) would be de-energized (through 38′) and signal 1 would go to the stop position; but 12 will be immediately re-energized, as, although 3 P at A is opened, by the opening of 38′, a path for the motor circuit is provided by circuit breaker 36, which is closed by the movement of the signal from the clear to the stop position.

The track relays used are two-point or double-contact relays and were made to carry two separate circuits. A wire, termed a "jumper," is soldered across, connecting together the two armature levers and the relay is used as a single contact relay. This was done to increase the carrying capacity if the current should become excessive.

At 5, Fig. 4, is shown the location of a cutout in the main feed wire, which is operated by the movement of the signal mechanism, and which is designed to automatically open the circuits leading to the signal and prevent waste of battery, if wires 9 and 12 should become broken or disconnected.

Fig. 11 shows the arrangement of signals and electrical connections at a junction where the automatic circuits must be under the control of an attendant. The switches and switch locks and the signals (like 2 and 12) which govern movements that are wholly within the yard, are worked by levers in a mechanical frame in the usual way; signals *y* and *z*, which are for movements wholly outside the interlocking limits are entirely automatic; and the signals (1 and 14) which control high-speed movements through the yard are worked by electric motors and controlled by the track

Digitized by Google

circuit, but are also controlled by the signalman, who can set them in the stop position at any time by opening the electric circuit which holds them in the clear position.

The lower arm of signal 14 is fixed in the stop position, and always shows a red light at night. According to a general rule in force on the Pennsylvania Lines west of Pittsburgh this "dummy" arm is always supplied in situations like that here shown, in order to make the practice uniform with that where there are diverging tracks, as at signals 1 and 2.

Signal *z* is shown, with its electrical connections, at *zk* and signal *y* at *yk*; these are controlled by the track circuits the same as the signals in Fig. 4.

Signals 1 and 2 are shown at 1 *k*. Signal 1 is controlled by relay *Tk*, the same as by relay 38 in Fig. 4; and relay 3 *Pk* performs the same function for the track circuit beyond signal *y* as does the similar relay in Fig. 4 for section B C.

The circuit breaker at 1 *d* is open whenever signal 1 is in the stop position, thus insuring that the distant indication for signal 1 shall always be "caution" when 1 indicates stop.

Lever No. 1 for signal No. 1, is shown at *Lk*. The signalman is free to reverse the lever whenever it is not locked home (it is locked home mechanically whenever switch 5 or switch 7 is not set for the main track, and whenever signal 12 or signal 13 is cleared); but reversing lever No. 1 does not clear its signal unless the track is clear from signal 1 to signal *y*; for the track circuit of this section (battery 43, relay *Tk*) controls the lever by circuits presently to be described.

Digitized by Google

At 40 is shown the electric lock for lever No. 1. This lock when de-energized holds lever No. 1 immovable (if the lever is in the normal or "stop" position) and it is energized (unlocking the lever) only when its circuit is closed at *g* and at *ks*.

At 48 is shown a rotary circuit controller which is operated by the movement of the latch lever on lever No. 1. The "stick relay," 41, is to compel the signalman to return the lever to the normal position before clearing the signal a second time. The "lever relay," 42, is energized only when lever No. 1 is reversed. In these semi-automatic signals this relay controls the same circuits that the track relay does in the entirely automatic.

The arrangement of circuits is as follows: From battery by wire *a*, track relay contacts *b*, wire *c*, circuit controller 48 at contact *d*, wire *e*, stick relay 41, wire *f* back to battery. When 48 is shifted by lifting the latch lever, contact *g* is closed and *d* is opened, the stick relay circuit remaining complete through wire *h*, stick relay contact *i*, relay 41, wire *f* to battery. Contact *k* of the circuit controller 48 has also been closed, completing the lever relay circuit through *a*, *b*, *c*, *k*, wire *L*, contact *m*, wire *n*, lever relay 42, wire *f*, back to battery.

When relay 42 is closed by the action of the signalman on the latch the signal circuits will be completed through its contacts, the same as they are through the track relay in the entirely automatic, and the signal is shifted by the motor from "stop" to go ahead.

When a train enters the block section between signal 1 and signal *y*, track relay *Tk* is opened, the circuits

Digitized by Google

through stick relay 41 and lever relay 42 are broken and the signal is shifted to stop. Stick relay 41 will remain open, as no current can pass through its coils until lever 1 is returned to its normal position completing the circuit for 41 through *d*.

This the putting of the signal to the stop position is done in a manner similar to that described in Fig. 4; but the movement of it the other way is controlled by the signalman, through 48 and 42. Closing 42 has no effect on the signal unless the track is clear, as the presence of a train on the track between 1 and *y* will hold the motor circuit open at *Tk*, and a train between *y* and the next block signal will hold it open at 3 *Pk*, the same as in Fig. 4. When, by lifting the latch preparatory to pulling the lever, the signalman closes 42, he closes the motor circuit at *v*; but if the track is clear only to *y* the signal will be moved only to the caution position; while if the section beyond *y* is clear the signal will be moved to the clear position.

When lever lock 40 is de-energized and its armature down it locks lever No. 1 immovable, provided the lever is in its normal or "stop" position. When the signalman lifts the latch preparatory to pulling the lever he closes the circuit of 40 at *g* and thus causes 40 to unlock, provided its circuit is also closed at *ks* (wires 50, 51 battery, wires *f* and 49); and it is closed at *ks* if the signal is in the stop position.

On the approach of a train from the east the signalman, if the westbound track is clear as far as *y*, proceeds to pull lever 1 to put the arm of signal 1 in position to admit the train. He must first release the lever by lifting its latch; this moves 48, closing *g* and

Digitized by Google

Digitized by Google

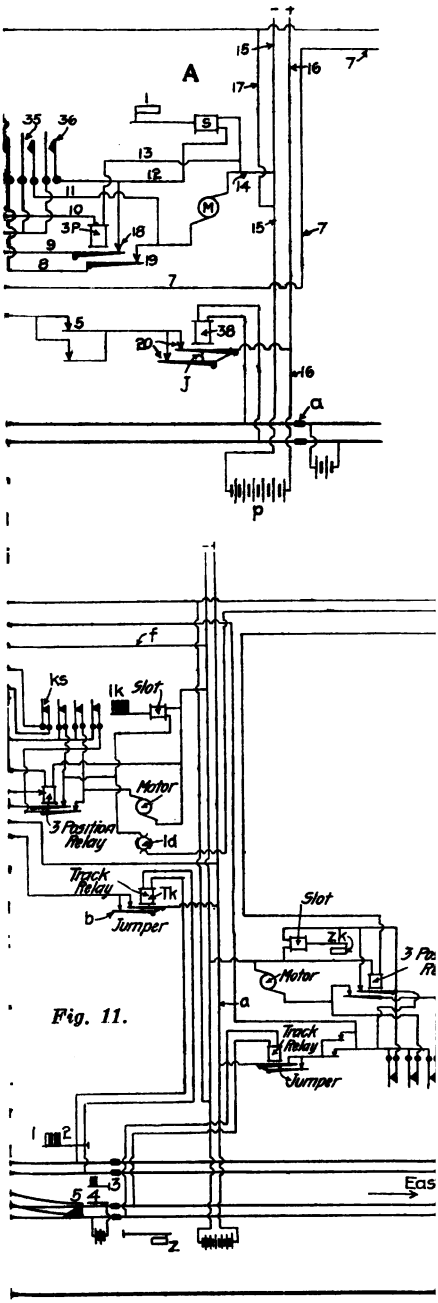

Fig. 11.

Digitized by Google

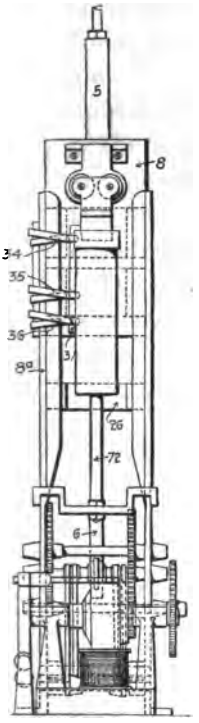

Fig. 6.

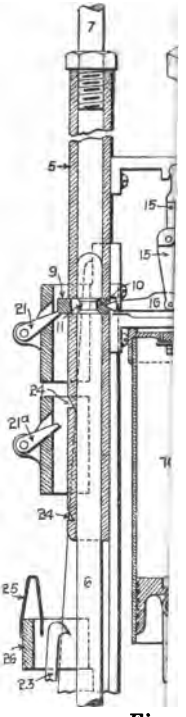

Fig.

THREE-POSITION A
PITTSBURGH, FO

Sectional Drawings and Elev
Showing A

Fig. 4, electri
from station to
Figs. 6, 7 an
ing the signal
Fig. 11, elec
matic signals a

Digitized by Google

Digitized by Google

opening *d*; (41 is not affected, as it has two connections from 48); lifting the latch also closes *k*, closing 42; and this last starts the motor to move the signal arm downward.

The slot machine circuit closers shown on this plan are the same as those shown in Fig. 4, except that there is a fourth one, *ks*, its function being to close the lock circuit when the signal is at "stop."

The control of lever No. 14 is arranged in the same way as that of No. 1.

Digitized by Google

CHAPTER XII

CONCLUSIONS

We have now examined the two methods of block signaling by the aid of electricity, and their principal sub-divisions, viz., (1) manual, (a) simple, and (b) controlled by electro-mechanical means; (2) automatic by (a) disks, (b) enclosed disks, (c) semaphores worked by mechanical power, and (d) semaphores worked by electric motors. Seeing these different kinds, all of them, except one, still in favor in one place or another, the reader may, not unnaturally, desire to make a comparison of their relative merits; or at least to inquire why such a variety is necessary or desirable. Only a qualified answer can be given to this question, for the art of signaling is yet comparatively new and some ideals, the attainment of which is by no means unlikely, are still unattained. Some of the devices in use, though efficient, are still undergoing improvement. At first but few railroads introduced block signals unless they were practically compelled to do so, by pressure of increased business or by difficulties in disciplining trainmen to observe the necessary safeguards in running trains without block signals. They therefore felt it necessary to take the best apparatus or method available at the time, without making exhaustive comparative tests. Progress has, therefore, been rather intermittent and unsteady, and the state of the art can hardly be called well settled.

The original method of spacing trains—by main-

Digitized by Google

taining an interval of time, of from 5 to 15 minutes, at every station (and, of course, only at stations), between each two trains running in the same direction—may become unsatisfactory for either or both of two reasons: (1) too many trains, so that the shortest practicable time interval is too long, and causes delays to the trains; or (2) difficulty in warning the following train when the leading train is delayed between stations and uses up the time interval.

Under the first head the question is, How short a time is sufficient to warn a second train in case the first is unexpectedly stopped? In clear weather, in daylight, on a level prairie, probably three minutes would be deemed long enough. But every railroad is subject to foggy weather, and those in cold climates have to contend with snow, so that in making rules for general application it is necessary to prescribe an interval long enough to insure safety under these adverse conditions; and five minutes is the shortest time interval in common use. Trains running at the rate of a mile a minute must therefore keep five miles apart. Block signals, fixed so as to permit trains to run only one mile apart, will therefore increase the capacity of a railroad under these conditions five-fold. Where curves or tunnels are numerous a longer time interval is desirable, and 7 minutes or 10 minutes is the rule on many roads. With this the need of the block system is, of course, felt sooner than with a short interval. Where the distances between stations are more than, say, five miles, the time-interval system becomes unsatisfactory by reason of the varying speeds of trains. A light train leaving a station at 8:05 may in

Digitized by Google

a few miles overtake a heavier train which left at 8:00. An essential element in the safe operation of the time interval system is the maintenance of a uniform rate of speed with all trains of the same class, and this is often difficult.

The second point is the difficulty in warning following trains. Fogs and snows, already mentioned, obscure the engineman's view and therefore make it necessary for a man to go back with a flag or lantern a half mile or more. On a crooked road in a hilly country this is the minimum distance at all times, whatever the weather. The faster the train runs, the longer must be the time interval, to permit the flagman to go back far enough. The irksome nature of the work tempts flagmen to neglect their duty; delays due to waiting for a flagman to return to his train tempt conductors to shirk sending out a flag; leaving a flag displayed after its train has resumed its journey, deceives the following engineman; and leaving a separate flagman behind on the occasion of each detention deprives the train of brakemen, and delays the following train to pick up the flagmen. All these circumstances combine to make the time interval unsatisfactory. Failure to carry out the regulations causes a collision now and then, entailing loss of life and property.

But unsatisfactory as is the time interval and flagging system, the block system is a costly substitute for it. A road running only one train a day, or keeping only one engine under steam, obviously needs no block system. A number of trains may be run while yet the expense of keeping an attendant on duty at every sta-

Digitized by Google

tion, day and night, or even continuously during the day, may be deemed unwarranted. But as soon as a road has enough business to warrant the employment of regular station agents on duty all the time, it should have the block system. The managers of thousands of miles of railroad, by their action, if not by their words, deny this; but on the other hand some of the wisest and most experienced managers hold this view. Imagine a road with stations 15 miles apart and trains running over the line once in two hours (average interval). The block system is now used on very few lines of that kind; and yet the enforcement of a time interval of 20 to 30 minutes between passenger trains and of 30 to 60 minutes between freight trains would make it possible to use the space interval, with its greater safety and more satisfactory conditions. Those superintendents who have adopted the block system with long block sections testify that the enforcement of the long time intervals necessary to do this (long as compared with former practice) is not nearly so difficult as had been feared. In fact, it is not difficult at all.

With a moderate number of trains the manual is the only block system that can be used, because the cost of the apparatus for the automatic system would be prohibitive; whereas, the attendance necessary with the manual system can be devolved upon station agents, whose other duties are light, and whose attendance at their offices will cost nearly or quite as much if they do not do signaling as if they do. Only two railroads have made extensive use of automatic signals on a single-track line.

The introduction of electrical apparatus, like Cole-

Digitized by Google

man's, in connection with manual block signals, makes a considerable addition to the expense. Such apparatus, to be of value, must have every possible safeguard, and must be supervised with great care and intelligence to make sure that the safeguards provided are regularly used. It has been but little used except on important lines; and if we may judge by the action of the large number of railroad companies which have considered it but have not adopted it, its value is a point on which there is as yet no satisfactory agreement.

Coming now to automatic block signals, the practical question is not whether or not to use the space interval, but what kind of apparatus to use. As already intimated, a road cannot afford the outlay necessary to put in automatic signals unless it has a considerable traffic, and these signals were first put in chiefly by roads with ample capital. In the early years of automatic block signaling the question of the reliability of the apparatus was a chief element in deciding whether or not to use a given design, and there was much discussion whether or not a machine could perform signaling functions with the uniform safety which is secured by employing a man at each signal station. Those who believed that the machine was not to be trusted and who yet felt that the liability of men to forget was a weakness of the manual system, were inclined to adopt the electric locking apparatus, of which the Coleman machine is an example.

Perhaps the most instructive example in America is that of the Pennsylvania Railroad. This company introduced manual blocking extensively on its main

Digitized by Google

line more than 20 years ago, and to some extent more than 30 years ago. Cabins were built, separate from stations, and very little of the signal work was done by men having other duties, so that the cost of the system was heavy. But the traffic was also heavy and the expense was deemed fully justifiable. After using the automatic signals in a limited way for a few years, however, beginning in 1884, the company began to extend them quite fast, and now has protected by them about 500 miles of track on lines which formerly were signaled by men; so that there can be no question that, as far as safety goes, automatic signals are deemed fully as satisfactory as the manual system. And the abandonment of scores of cabins, with their night and day attendants, has, of course, made a large reduction in the monthly expense account.

The relative desirability of the different kinds of automatic signals is a question that cannot be entered into here, for to do so with any thoroughness would take the discussion beyond the scope of this work. Moreover, the element of cost has been an important factor with railroad officers in deciding what to use. But a few obvious comparisons, already touched upon, may, for convenience, be restated here. The disk, unprotected from the weather, is still in use and is so satisfactory that one road which took some of this kind out, to introduce a later design, on an important line, re-erected the disk signals (clock-work) on a line which was less important, but still not an unimportant one; but no new unenclosed disk signals are being put up, because, first, the enclosed disk has become better known and has been improved, and, second, the auto-

Digitized by Google

matic semaphore has been cheapened and improved. The expiration of patents on some devices has led to improvements. The enclosed disk is superior to the outdoor, because it can be worked with much less power. The semaphore, in turn, is superior to the enclosed disk because it cannot be obscured by snow or reflected light on the glass, though it requires more power. The development of the electric motor and the improvement of frost-proof batteries has made the electric semaphore possible. Motors and economical batteries were unknown when the clock-work signal was invented. Automatic electric semaphores protecting 35 miles of four-track railroad are now worked by a dynamo at a central station, feed wires being strung along the line of road and storage batteries being introduced at each signal, or where necessary.

The electro-pneumatic signal has been developed somewhat independently of other kinds. The cost of a power station for compressing air is a large item of expense, and except on the Pennsylvania Railroad no block signals of this kind have been put up unless a compressor was installed for a large yard. Perhaps the Pennsylvania is not an exception, as there are numerous yards on those of its lines which have electro-pneumatic block signals; but evidently the company believes this type of signal the best for all double-track lines on which the traffic is heavy.

As before stated, the Pennsylvania Railroad has shown by its action that automatic are deemed as safe as man-operated signals. A precise comparison of the relative safety of the two systems cannot be made, for the reason that the number of lives saved by the use

Digitized by Google

of the one system as compared with the other, or by either, compared with no block signals at all, cannot be fairly computed except by considering a long series of years. The amount of money saved by the prevention of collisions is also hard to compare, as between the two systems, for the same reason; though as between a block system and no block system, some roads have found a decided saving immediately on the introduction of the space-interval, the number of minor freight-train collisions being at once reduced.

With man-operated signals no record is available of the number of errors made in a thousand or a million train movements, although errors have been made, resulting in collisions, not only with the simple manual system but also with the "controlled manual." For automatic signals a few records have been published. These give failures under two heads, (1) failures which cause delay only, (2) failures which may cause a collision by showing a signal "all-clear" when it should show "stop." From the standpoint of safety we consider only the latter class. In the operation of automatic signals on the Chicago & Northwestern Railway for seven years, with over three million signal movements yearly, the proportion of false clear indications has been about one to one million. A similar ratio was given in a statement published by the Philadelphia & Reading. The latest record from the Pennsylvania road is one of somewhat earlier date, and shows 1 to 635,151.

The cost of installing and maintaining automatic signals is a question which, like that of deciding when and to what extent the block system shall be intro-

Digitized by Google

duced, must be decided largely by each company for itself, local circumstances varying widely. A few general statements will serve as landmarks.

The Philadelphia & Reading has spent for enclosed disk signals from $1,500 to $4,000 per mile of road. The cost per mile varies according to the length of the block sections and the frequency of the switches. The larger sum refers to lines with more than two tracks with a distant signal for each home signal, the distant being on the same post with the home signal of the next block section in the rear. The cost of disk signals has been reported in various cases as about $400 per signal. The cost of maintenance of disk signals has been reported at from $67 to $100 per signal per year. For semaphores worked by electric motors, actuated by batteries a complete equipment for a double-track line, with distant signals, costs from $1,200 to $1,800 per mile, the smaller figure being for a line with few switches.

The cost of electro-pneumatic signals on a four-track railroad, with block sections averaging three-fourths of a mile long, was, in a certain case, $5,000 a mile, which, of course, included distant signals. The cost of maintenance of signals of this kind for one year, including oil and attendants for the lamps, material and attendants for the batteries, air compressing and repairs to the compressing plant, is given for one four-track railroad as $33.93 per signal arm. The cost per mile of road, with blocks of the length just mentioned would, therefore, be $362 a year.

The total length of railroad in the United States on which block signals are used is (December, 1900) ap-

Digitized by Google

proximately 26,000 miles. This includes certain lines where the block signals are used only to protect passenger trains; but these are essentially block signaled lines, for the vital feature is the presence of the facilities and of the men trained to use them. Even the British Government, with its strict standards, has to leave the railroads free to use the permissive block system with freight trains whenever the absolute rule would cause delay. With this mileage included, we have just about ten times as much manual as automatic signaling. On the basis of miles of track, however, the proportion would be different, as of the automatic mileage five-sixths is double track or four track, while of the manual three-fourths is single track. Of the road worked by manual signals about 1,000 miles has the "controlled manual," more than a third of this being four-track line.

The following table, showing the names of the roads on which this block signaling is to be found, is condensed from a more detailed list published in the *Railroad Gazette*, January 11, 1901, in which was given the mileage of single-track, double-track and four-track road under each of the two headings; also (for the most of the roads) the termini of each section of road signaled.

Digitized by Google

MILES OF RAILROAD IN THE UNITED STATES WORKED BY THE BLOCK SYSTEM

	Automatic.	Manual.	Total.
Atchison, Topeka & Santa Fe	24	1,007	1,031
Atlanta & West Point	....	6	6
Atlantic City R. R	53	27	80
Atlantic Coast Line	....	127	127
Baltimore & Ohio	....	290	290
Baltimore & Ohio Southwestern	....	15	15
Boston & Albany	146	.....	146
Boston & Maine	8	92	100
Central of Georgia	....	28	28
Central of New Jersey	79	.....	79
Chesapeake & Ohio	....	1,020	1,020
Chicago & Alton[1]	39	864	903
Chicago, Burlington & Quincy	25	298	323
Chicago & Eastern Illinois	8	717	725
Chicago, Milwaukee & St. Paul	7	2,036	2,043
Chicago & Northwestern	113	1,300	1,413
Chicago Terminal Transfer	4	.....	4
Chicago, Rock Island & Pacific	15	.....	15
Chicago & Western Indiana	....	20	20
Chicago, St. Paul, Minneapolis & Omaha	4	437	441
Cincinnati, Hamilton & Dayton	....	25	25
Cincinnati, New Orleans & Texas Pacific	229	10	239
Cleveland, Cincinnati, Chicago & St. Louis[2]	....	1,683	1,683
Delaware & Hudson	38	.....	38
Delaware, Lackawanna & Western	58	.....	58
Erie	....	1,257	1,257
Hannibal & St. Joseph	....	6	6
Illinois Central	87	.....	87
Kansas City, Ft. Scott & Memphis	4	39	43
Kentucky & Indiana Bridge	....	14	14
Lake Shore & Michigan Southern	40	1,418	1,458
Lehigh Valley	313	801	1,114
Long Island	....	39	39
Metropolitan West Side Elevated, Chicago	3	.....	3
Michigan Central[3]	160	355	515
Mobile & Ohio[4]	....	20	20
Nashville, Chattanooga & St. Louis	....	8	8
New York Central & Hudson River	22	1,149	1,171
New York, New Haven & Hartford	251	438	689
New York, Ontario & Western	63	.....	63
New York, Susquehanna & Western	....	21	21
Norfolk & Western	1	876	877
Ohio River Bridge and connections	....	5	5
Pennsylvania (all east of Pittsburgh and Erie)	146	788	934
Pennsylvania (west of Pittsburgh)	35	349	384
Peoria & Pekin Union	....	6	6
Philadelphia & Reading	226	150	376
Pittsburgh, Bessemer & Lake Erie	....	152	152
Pittsburgh & Lake Erie	10	146	156
Pittsburgh & Western	....	54	54
Richmond, Fredericksburg & Potomac	....	82	82
Rio Grande Western	....	7	7
South Side Elevated, Chicago	9	.....	9
Southern[5]	11	6,055	6,066
Southern Pacific	35	42	77
St. Louis, Keokuk & Northwestern	16	.....	16
Terminal R. R. Association of St. Louis	....	12	12
Staten Island Rapid Transit	9	.....	9
Wabash	....	71	71
Wisconsin Central	....	6	6

Digitized by Google

The totals of the unabridged table are as follows:

	Miles.
Automatic, single track	405.5
Do., double track	1,653.3
Do., four track	235.9
Do., total	2,294.7
Non-automatic single track	18,144.0
Do., double track	5,823.8
Do., four track	405.1
Do., total	24,372.9
Total, both kinds, deducting duplications	26,608.9

NOTES

[1]On all but 80 miles of the manual blocking the block signals are used only during fogs.

[2]On about 1,200 miles of this road the block signals are used only to protect passenger trains.

[3]On those parts of the road where the manual block system is used, the space interval is ordinarily maintained behind passenger trains only.

AUTOMATIC BLOCK SIGNALS.

Total Mileage of Railroad Equipped to January, 1902.

	Miles.
Atchison, Topeka & Santa Fe	24
Baltimore & Ohio	94½
Boston & Albany	146
Boston & Maine	135
Canadian Pacific	16
Central of New Jersey	143
Chicago & Alton	39
Chicago, Burlington & Quincy	25
Chicago & Eastern Illinois	8
Chicago, Milwaukee & St. Paul	7
Chicago & North Western	196½
Chicago Terminal Transfer	4½
Chicago, Rock Island & Pacific	15
Chicago, St. Paul, Minneapolis & Omaha	4
Cincinnati, New Orleans & Texas Pacific	229
Delaware & Hudson	38
Delaware, Lackawanna & Western	258
Erie & Wyoming Valley	2
Grand Trunk	6
Illinois Central	87
Lake Shore & Michigan Southern	40
Lehigh Valley	~~318~~ 470
Los Angeles Terminal	2
Metropolitan West Side Elevated (Chicago)	3
Michigan Central	213
New York Central & Hudson River	78
New York, New Haven & Hartford	251
New York, Ontario & Western	64
Norfolk & Western	1
Oregon Short Line	23
Pennsylvania	208½
Pennsylvania Lines West	35
Philadelphia & Reading	282½
Philadelphia & Reading (Atlantic City Division)	55½
Pittsburgh & Lake Erie	10
South Side Elevated (Chicago)	9
Southern	11
Southern Pacific	76
St. Louis, Keokuk & Northwestern	16
St. Louis & San Francisco	4
Staten Island Rapid Transit	9
Union Pacific	15
	~~3,187~~
	3,354

Digitized by Google

Digitized by Google

INTERLOCKING

CHAPTER XIII

THE SAXBY & FARMER INTERLOCKING MACHINE

It is to be remembered that the function of all fixed signals, whether called block signals or by some other name, is to inform the engineman whether or not he may proceed beyond the signal, or on what conditions he may proceed; and to convey the information some seconds before it will have to be acted upon. This last is a vital feature, for the essential difference between driving a horse in the street, and driving a locomotive, the difference which makes costly signals necessary, is that the engine driver, controlling a heavy body moving at high speed, must have ample preliminary notice of any requirement to stop.

Interlocking was preceded by concentration of switch levers. As early as 1846 it became common in England to concentrate in one cabin the levers of a number of switches lying near together, and of the signals governing these switches, the services of one or more attendants being thus dispensed with, and the celerity of train movements being facilitated. But experience with a half dozen levers in one frame soon emphasized a new danger; the attendant might carelessly give all-clear signals simultaneously to two trains, coming from different directions, to proceed over routes crossing one another. To meet this diffi-

Digitized by Google

culty interlocking was devised. In large terminals, with numerous tracks, concentration of levers is now an essential requisite of prompt movement and economical use of ground; and interlocking is an essential feature of concentration.

Interlocked signals are worked from a cabin by rods or wires supported near the ground at suitable intervals on grooved rollers or pulleys. Of wires it is the usual practice to use two; the second or back-wire being added to make sure of the prompt return of the signal to the normal or "stop" position, though the

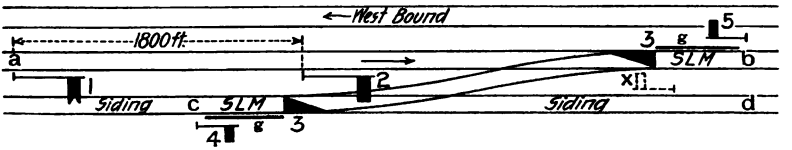

Fig. 42.—Interlocked Switches and Signals

LOCKING SHEET

1 locks 2 reversed.
2 locks 3 normal 5 normal.
3 locks ————
4 locks 3 normal and reversed (when 3 is reversed locks 5 normal)
5 locks 3 normal and reversed.

counterweight alone should perform this function. The universal standard signal for switches, crossings and drawbridges is the semaphore (Fig. 2, page 8); though at some drawbridges, and at many minor crossings (of one railroad with another) where interlocking has not been introduced, various balls, targets, gates and other old fashioned devices are still in use. Dwarf signals, about 4 ft. high, are used for very slow movements

Digitized by Google

such as those to and from side tracks. In crowded yards bridges are used, the same as for block-signals on four-track lines. (See Fig. 51).

The arrangement of interlocked switches and signals is the same whether the yard be simple or complex, and the principle is shown in the accompanying diagram, Fig. 42. This drawing shows a crossover

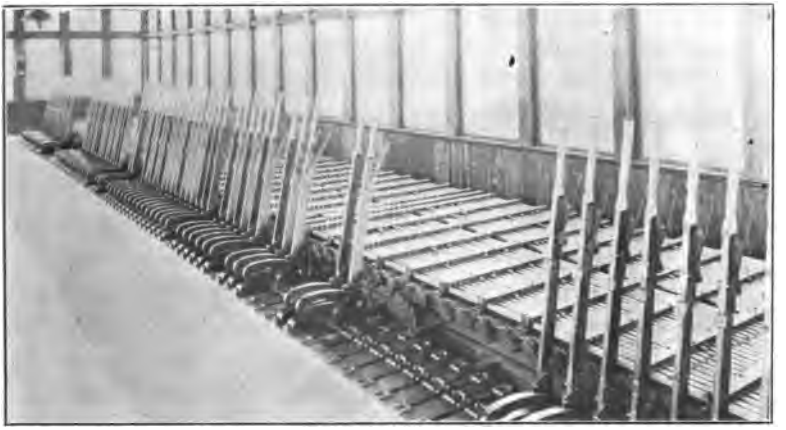

Fig. 41.—Saxby & Farmer Interlocking Machine

track connecting the siding *c d* with the eastbound main line *a b*. The switches are in their normal position, allowing trains to pass from *a* to *b* and from *c* to *d*; and the signals are all in their normal positions, each indicating to an approaching engineman that he must stop before he passes the signal. Signals 1 and 2, which are for high speed movements, are on tall posts, while signals 4 and 5, being for low speed move-

Digitized by Google

ments, are dwarfs. For complete signaling there would be a dwarf signal at x for movements from *d* to *c*; but to simplify the illustration that signal is here omitted. To permit a train to pass from *a* to *b* the signalman pulls ("reverses") lever 2, moving the arm of signal 2 to the all-clear or go-ahead position (60 degrees to 75 degrees downward); and the interlocking of the levers in the cabin prevents him from doing this unless the switch in the main track is in the right position. If the switch has been moved to the other position the lever of 2 is immovable. If signal 5 has been cleared for a movement in the other direction (from *b* to *a*) 2 cannot be cleared. Signal 1, when horizontal, does not stop a train, but simply gives notice to the engineman that he must expect to be stopped at 2. After 2 has been cleared, then 1 can be cleared, thus giving notice to the engineman that he can pass 2 at full speed. If, in the 1,800 feet between these signals, there is a curve, or if there should be a dense fog, shortening the view, this distant signal would thus appreciably economize the time of the train.

Until recently the usual practice has required a signal with two arms at 4 and the same at 5, the upper arm to be cleared for a movement along the straight line, and a lower arm for a movement through the crossover. With the practice as here shown, a single arm indicating a clear track, but not showing which of the diverging tracks is clear, the engineman is required to keep his speed sufficiently low to enable him to discover, from the position of the switch rails, which line he is traversing, in season to avoid any possible collision with a preceding train or car. For

Digitized by Google

high speed movements over diverging routes, the two-arm arrangement is used.

In this drawing the two switches marked 3, and the two locks which lock them, together with the detector bars, which move simultaneously with the switch-and-lock movement, are worked by a single lever, though in many cases a separate lever is used for the lock. The detector bars, the position of which is indicated by the lines *g g*, are to prevent the signalman from inadvertently throwing a switch while a train is passing over it. This device is briefly described in connection with Fig. 53.

A machine consists principally of as many levers placed side by side, on a common shaft, as are necessary to move the switches and signals. Two switches may be moved by a single lever; and two or more signal arms on the same post, or near together, may be so arranged that either one will be moved by the same lever, the position of the switch connections being made to govern the selection of the arm to be moved.

The main function of the interlocking feature of the machine is to prevent the display of conflicting signals. A machine is shown on page 175, and the construction of the main working parts of a machine of this type—the Saxby & Farmer, as made by the Union Switch & Signal Company—is shown in Figs. 45, 46 and 47. Fig. 45 is a back view of part of a machine. Fig. 46 shows one lever in side elevation, and the interlocking frame partly in elevation and partly in section. Fig. 47 is a plan.

The principal parts are *A* lever, *L* lever latch, *B*

Digitized by Google

rocker, *C* segment, *D* link, *E* locking shaft, *F F* locking bars (each lever in a machine has a corresponding lock bar *F*); *G* driver for bar, *H* locking dogs, fixed to the tops of the bars, *K* cross locks, sliding in grooves in a plane with dogs *H*, *u* tappet. The lever, Fig. 46, is in the normal position. Locking dogs are shown also at *k*, *p*, *r*, *s*, *t*, *v*, *w*; and cross locks at *x y* and *z*.

The operator, in grasping a lever preparatory to pulling it, lifts the latch rod, *L*, and in so doing turns the locking shaft *E*, on its axis, the latch acting through the link *D*; this, by means of *G*, moves one of the locking bars *F F*, lengthwise, and, by means of dogs *H*, and cross locks *K*, obstructs the movement of some other bar. By this operation, called preliminary locking, we may insure that no lever shall be pulled until all conflicting levers are first in a safe position. The latch having thus performed its locking function, and having unlocked the lever *A*, *A* is pulled over and the latch rod is allowed to drop. It drops behind the notch C^1, and, by tilting *B*, lifts *D* still further, pushing the bar *F* further, thereby unlocking such levers as may properly be unlocked after this one is reversed.

The process of locking and unlocking may be followed by taking an example of one or more movements from the locking sheet of Fig. 42. In doing this it is to be borne in mind that each reversal of a lever (or, more exactly, each unlatching and latching again which must accompany the movement of a lever) moves the corresponding locking bar *F* to the *left* (upward in Fig. 47). The bar carries with it its dog or dogs, the mitered ends of which push the cross locks one way or the other. The cross lock in each groove in Fig. 47, as

Digitized by Google

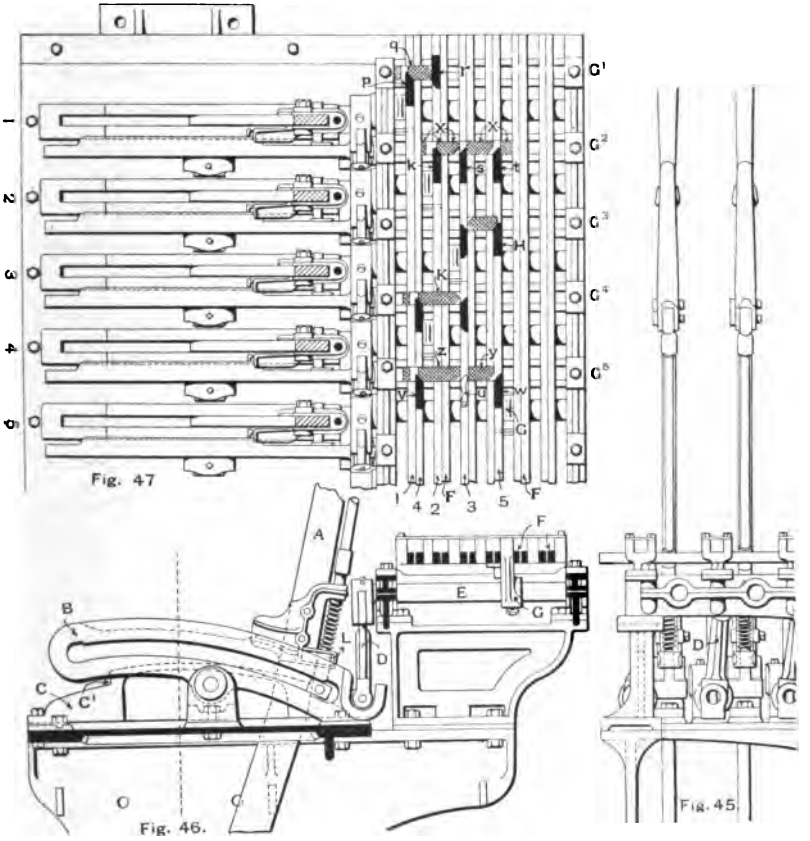

Figs. 45, 46 and 47.—Saxby & Farmer Interlocking Machine, as Made by the Union Switch & Signal Company

Digitized by Google

x x, groove G^2, is in a single piece, with notches cut for the dogs, as shown; except that in groove G^5 there are two separate pieces y and z. These do not perform any function except when tappet u lies between their square ends, so that when either is pushed toward the other that other is moved along also.

To reverse lever 2, for the purpose of clearing signal 2, lever No. 3 and lever No. 5 must be normal. Now, in pulling lever No. 2 (Fig. 46) locking bar 2 (Fig. 47) is made to slide as just described; and this, by means of dog k, pushes cross lock x to the right, thus holding dog s in its present position; which locks lever 3 by holding locking bar 3 motionless. The movement of 2 also has the same effect on lever 5 by locking t. With the movement of locking bar 2, dog r, by releasing cross lock q unlocks bar 1 by making it possible to push dog p. Dog r does not clear q until the lever 2 has been reversed and its latch dropped.

When the bar 1 is unlocked, the signalman may clear the distant signal 1 by lever 1. This movement pushes p, and thus, by means of q, locks 2 in its new (reversed) position. Thus the signalman cannot throw up home signal arm 2, and try to stop a train after he has allowed the train to pass signal 1.

If, at the beginning, the switch had been set for the side track (lever 3 reversed) signal 2 could not have been cleared, because dog s would block dog k; but signal 4 or signal 5 could have been cleared. When the switch lever (3) is reversed, tappet u is pushed in between cross locks y and z, so that clearing signal 4, which moves bar 4 and dog v, locks signal 5 by blocking dog w. If the signalman should clear signal 5 in-

Digitized by Google

stead of signal 4, the movement of bar 5 (dog *w*) would lock 4 in its normal position, by blocking the path of dog *v*.

Where a track diverges from the main track in the high speed direction, as at signal 2, Fig 42*a*, two arms are provided, as shown; the lower arm being for the

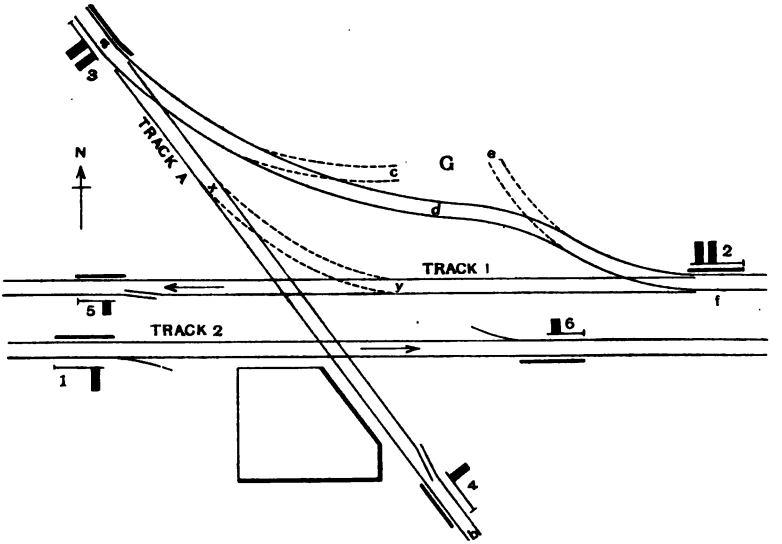

Fig. 42a.—Signals and Derails at a Crossing

side track. Sometimes this lower arm is smaller than the upper one; and on some roads a dwarf signal would be used instead of the second arm. In the most recent practice this one arm is deemed sufficient even if there be two or more diverging routes. In many existing plants the earlier practice still prevails of having the upper arm indicate for the route at the extreme right

Digitized by Google

and the other or others in the order in which the tracks lie, the lower arm indicating for the route to the extreme left.

The arrangement of signals at a crossing of one railroad with another is shown in Fig. 42*a*. A simple crossing as of track A with track 1 would require four single arm signals, placed as shown at 1, 2, 3, 4. To provide against a collision on the crossing in case an engineman neglects to stop at the signal when it is against him, a derailing switch (called "derail") is used. An outline of such a switch is shown at signals 1, 4, 5 and 6. A "derail" is simply half of an ordinary facing point switch, and it is normally left open as at 4 and 5, so that a train disregarding the signal is thrown off the track. Where possible the use of derails should be avoided by putting in a diverging track. Such a track is shown in the drawing, leading from A at *a*; also one from track 1 at *f*. In some cases such a track is made continuous, as *a d f*, so as to be used, when necessary, for transferring trains from one road to the other. If such a connecting track is so short that its use would not be likely to promote safety, "dead ends" may be laid as shown at *c* and *c*. A mound of earth should be made at *G*. Signals 5 and 6 are for "back-up" movements which, according to the usual regulations, must be made at low speed.

Each switch and derailing switch has a detector bar (Fig. 53) to provide against careless throwing of the switch while a train is upon it. The lower arms of signals 2 and 3 are to admit trains to the side tracks.

Signals 1, 2, 3 and 4 should, of course, have distant signals, suitably interlocked, set back far enough to

Digitized by Google

obviate the necessity of an excessive reduction of speed in approaching a crossing.

After a train has passed a distant signal at "all-clear" (the engineman expecting to find the home signal also clear) a hasty signalman might restore the distant to the caution position, then restore the home signal and then clear the conflicting route, and cause a collision. To prevent this the levers of the signals for the conflicting route or routes are sometimes fitted with electric locks. The circuit for these locks runs through the rails of the track between the distant and the home signal, so that the presence of the train locks the levers. For example, signals 3 and 4 being fitted with the locks, the track circuit controlling them would extend from signal No. 1 back to its distant signal; and a train passing this distant signal at all-clear would, by shunting the electric current, lock 3 and 4 and hold them locked until it passed over the crossing. If the distant signal were at caution the train passing it would have no right to foul the crossing, and it would not thus act on levers 3 and 4; for the locks on these levers are never operative except when the lever of the distant signal of signal 1 is pulled to the clear position. When it is pulled it closes a circuit through magnets on levers 3 and 4, withdrawing a lock bar which, until it was thus withdrawn, prevented the track-circuit lock from acting. I have said that a train, in locking conflicting levers, secures them in the locked position until it has passed over the crossing. This, however, is not done by the single track circuit before mentioned. That circuit extends only from the distant signal to signal 1. Beyond signal 1 there is

Digitized by Google

another track circuit, performing a similar function; but not controlled or interfered with either by signal 1 or by its distant signal. It locks 3 and 4 whenever a train is on the track between signal 1 and signal 6.

Signals, arranged as here shown, are used to protect trains approaching drawbridges. If track *A* were a stream, with a drawbridge spanning it carrying tracks 1 and 2, the approaches would be signaled as at signals 1 and 2, but with a single arm in each case. The back-up signals are not usually required and, indeed, are not always required at crossings. The derailing switches (and signals) at a bridge must, of course, be far enough back so that a train which is derailed will not run into the river. The levers are interlocked with the lever by which the draw is locked in position, so that the bridge can never be unlocked until the signals are at "stop," and the signals can never be cleared until the bridge is in position and locked.

Switches, signals and locks are connected with the cabin by iron rods (angle iron or gas-pipe) as before stated. The foundations of the supports of these are of wood, cast iron or concrete. Concrete foundations are comparatively recent, but are cheap and durable. For signals (but not for switches) wire connections are generally used, being cheaper than rods. In changing the direction of a line of rodding (pipe) a bell crank is used, but where a wire has to make a sharp turn a piece of chain is inserted and run around a grooved pulley.

To compensate for expansion or contraction of signal rods due to variations in temperature a rocker or

Digitized by Google

a simple crank is inserted about every 500 ft.; and where bell cranks have to be introduced those can be used as compensators, if they are so situated that the length of rod pushed is approximately equal to the length pulled.

In a straight rod the most common form of compensator is the "lazy-jack," Fig. 43, a pair of levers, connected, turning on vertical pins in a frame which is fixed in a horizontal position. Pushing *a* pulls *b*, and vice versa. The original direction of the movement can, of course, be restored at the next crank.

With wires, which cannot be pushed, the problem of

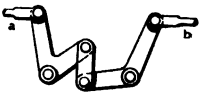

Fig. 43.—Compensator for Signal Rods

compensation is more difficult. Numerous devices have been tried and rejected, including a cylinder filled with liquid, in which a piston moved by expanding liquid took up the slackness of the wire. This was found too delicate for the rough usage that such a device is subjected to. The most common type of wire compensator is that which may be described as a disengaging clutch. The end of the wire which enters the cabin is not connected directly to the lever of the machine, but runs over a pulley to a weight or spring which keeps it always taut; and, a row of suitable notches, teeth or holes being provided in a solid bar (which is virtually a part of the wire) the signal lever, when grasped for a pull, is made to engage with a near

Digitized by Google

or distant tooth according to the distance the toothed bar has been drawn in by the weight (as in hot weather) or let out (as in cold weather).

Fig. 44 shows a compensator, used extensively on the Pennsylvania Railroad, which was invented by Mr. Joseph R. Jones, of Philadelphia.

In the figure the lever is "home" or normal and the signal is at "stop." The main features of the compensator are the ratchet wheel N with a sprocket hub, the weight N^1, the pawl K and the rod S, with their connections. The front wire, used to pull the signal to the all-clear position, is connected, as shown, to the chain A^1, which runs over the sprocket hub of N to and around pulley C^1 and to the link attached to the axle of floating pulley E^1. The similar connection for the back wire needs no explanation. The wheels N are supported on the arms of the signal lever by jaws E, in which they are suitably mounted. The chains L^1 support the weight N^1 in case of breakage of either wire. Rods S and S^2 are adjustable at the top, and at the bottom they act on their respective levers by means of adjustable nuts.

In the position of the apparatus here shown, wheel N is free to revolve, and any expansion of the front wire is taken up by the weight N^1. When, for the purpose of pulling down the signal arm, the lever A is pulled to the left, lifting arm C, the lever G (pivoted at the right-hand end to C), being no longer supported by rod S, allows the weighted end K of the pawl to drop; this pawl, having at the end opposite to K a suitable nose, now engages with the teeth of ratchet wheel N and keeps it from revolving; this practically

Digitized by Google

makes the front wire, which is taut, fast to the main lever A, and the movement of the distant signal arm, therefore, corresponds precisely to the movement of the lever. As arm C rises, arm D falls, and the slackening of chain F^1 allows chain A^1 to be pulled up

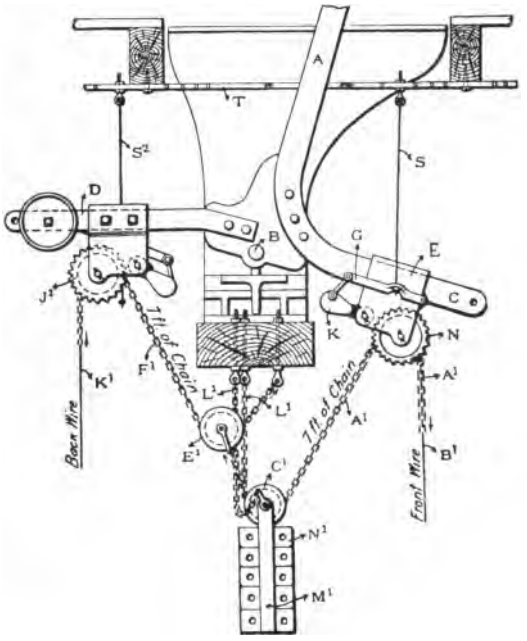

Fig. 44.—Jones' Compensator

without lifting the weight N^1. Each of these chains is 7 ft. long.

When the lever is in its normal position, as shown in the cut, the back wire K^1 is held fast by the sprocket wheel J^1 the action of the pawl on this side being op-

Digitized by Google

posite to that of pawl K. Whenever the signal is pulled off, as described in the preceding paragraph, the depression of arm D causes rod S^2 to engage with the pawl, lifting it out of contact with the ratchet wheel and allowing the latter to revolve. Every time, therefore, the signal lever is pulled, any undue tension or slackness in the back wire is relieved or taken up, as the case may be, by the weight N^1 acting through pulley E^1. The pawls on both sides have springs by which, combined with the gravity of their heavy ends, they are made to quickly engage with the ratchet wheels when not controlled by the vertical rods.

The ceiling bar, T, supporting the rods S and S^2 need not be continuous; short bars extending out from each timber, answer just as well.

The weight N^1 is adjustable, the several pieces being cast with necks so shaped that they can be readily put into or taken out from the yoke M^1. Under normal conditions wires 500 ft. long require a weight of 75 lbs.; wires 1,000 to 1,500 ft. long, 100 lbs.; 2,000 ft., 125 lbs.; 2,500 ft., 150 lbs.; 3,000 ft., 175 lbs. Approximately one-fourth of the weight acts on the back wire and one-half on the front wire, the remaining fourth being carried by the fixed support. It is found desirable to divide the weight between the two wires in about this proportion, the tension on the back wire being, of course, less than that on the other. In the event of the breakage of either wire the weight drops until it hangs on chain L^1, and the tension on the other wire is released.

Digitized by Google

CHAPTER XIV

THE JOHNSON INTERLOCKING MACHINE

In this machine the locking bars, instead of being arranged in a horizontal frame, are placed in a vertical position. This saves room, as the frame is placed beneath the floor, and a narrow cabin affords all needed space. The weight of the vertical bars or tappets is, however, added to the load to be moved by the attendant, and it is not so easy to provide against wear of parts. A section of a machine with a side view of one lever is shown in Figs. 48 and 49; and a machine of the same general type as the Johnson, but with differences in detail, is shown on page 192. The lever shown in Fig. 48 has connections for a signal. For a switch the rod would be connected to it at *H*. The bar *K* is for use where a signal is connected by two wires. The lever is held in each of its two positions by the latch rod V^1, which engages with notches in the segment *B*. When the signalman, preparatory to clearing a signal, grasps the lever at its upper end he moves V^1 upward; and in so doing actuates the interlocking, through the tappet *N*, attached at *T*. In lifting the tappet he locks all conflicting levers which need to be locked to make it safe to move this one. In pulling over the lever the rocker *R* is also pulled; but the slot in it is radial to the center on which the lever turns, so that, during the stroke, *N* remains motionless. On the completion of the stroke and the dropping of V^1, *N* is raised still fur-

Digitized by Google

ther, and this unlocks such levers as should be unlocked after this lever is pulled ("cleared" or "reversed"). It will be seen that whenever the tappet N

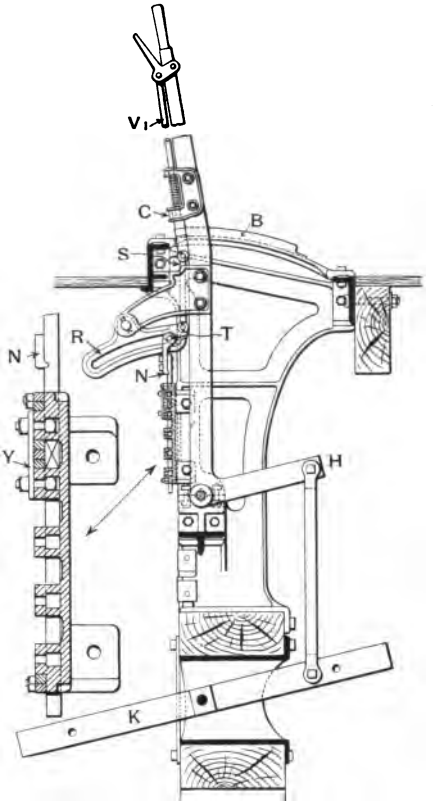

Fig. 48.—Johnson Interlocking Machine

of any lever is locked in the position shown in the engraving it is impossible to raise V^1, and therefore impossible to move that lever.

The action of tappet N and the way in which it is

Digitized by Google

locked may be understood by reference to Fig. 49. A tappet, say No. 3, slides vertically in a planed recess in the locking plate, being held in place by horizontal strips *G* and *K*. Transverse grooves *N*, *O*, *P*, carry

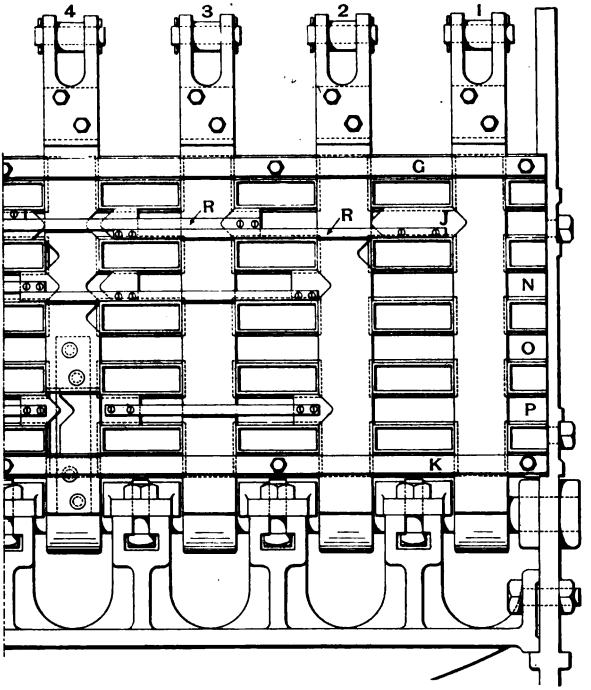

Fig. 49.—Locking Tappets and Dogs

dogs, such as *J*. Two dogs may be connected together by bars, *R*. The dogs are held in place by straps, *Y*,

Locking is effected by sliding the dogs horizontally; for example, dog *J* has been pushed into the notch in tappet 1, holding it in the normal position. If tappet

Digitized by Google

Part of an Interlocking Machine made by the Standard Railroad Signal Company, Troy, N. Y

Digitized by Google

2 were raised, a distance equal to the width of a dog, its notch would come opposite dog *J*; and then the lifting of 1 would lock 2 by pushing *J* to the left. By means of rod *R*, which connects *J* with a dog which will engage with tappet 4, the lifting of 1 also locks 4. If 4 were already up it would be impossible to lift 1.

Digitized by Google

CHAPTER XV

THE WESTINGHOUSE ELECTRO-PNEUMATIC INTERLOCKING MACHINE

[*See Inset No. 3*]

The most widely used power apparatus for working switches and signals is the Westinghouse, made by the Union Switch & Signal Company, over 75 plants being in use in the United States. The Westinghouse signals at the South Station, Boston, constitute the most elaborate power interlocking plant in the world, though there is no block signaling connected with it.

In this system the switches and signals are moved by compressed air at 70 lbs. pressure per sq. in. acting on a piston in a cylinder fixed to the signal post or on sleepers near a switch. The air compressor and reservoir, near the cabin, are connected to each switch or signal-cylinder by iron pipes buried in the ground. The compressed air is passed through cooling pipes to precipitate any excess of moisture. Near each cylinder is a small reservoir to provide a sufficient supply of air to insure quick action of the piston at every operation. The valves at each cylinder, admitting air to it, are opened and closed by electro-magnets, controlled from the cabin; the wires, like the air pipes, being laid under ground. At each switch is a circuit closer for giving an electric "indication" in the cabin when the movement and locking of a switch are completed. In the machine the levers are only a few inches long and very light, their main function being to open and close

Digitized by Google

electric circuits. (These "levers" appear as cranks on the front of the machine, shown in the perspective view, Fig. 50). Each lever has a latch by which it is fastened, but this does not have anything to do with the interlocking of one lever with another. Instead of pulling or pushing a lever the operator turns it to the

Fig. 50.—Part of a Westinghouse Electro-Pneumatic Interlocking Machine

right or to the left, and it performs its function through the medium of a long horizontal shaft, which is revolved on its axis, through 60 degrees of a circle; and the shaft actuates the interlocking (mechanical) by dogs turned into the paths of sliding bars, on the same principle as that of the Saxby & Farmer interlocking before described. The "indication" from a

Digitized by Google

switch or signal actuates a magnet fixed near that shaft (in the machine) which controls that switch or signal; and to insure that the signalman shall not clear a signal before its switch is in the right position, this magnet locks the shaft, after it has been turned far enough to move the switch, and prevents the man from completing the turning of the shaft until the

Fig. 51.—Signal Bridge No. 7, South Station, Boston

switch has actually finished its stroke and sent its "indication." The "indication" being received, the stroke of the lever is completed and, the prescribed interlocking having thereby been effected, the lever for the signal, to give "clear" for the route over this switch, may be moved to the clear position.

The signal used in the pneumatic system, a semaphore, is similar in general appearance to the mechani-

Digitized by Google

cal semaphore. Where the signal is placed on a bridge its post is short, and precisely the same design is used both for interlocking and for block signaling. The latest design for this purpose is shown in Fig. 34, page 133. This signal is the result of years of development and embraces numerous improvements made by the manufacturers since the system was first used.

In the dwarf semaphore, used for signals situated on the ground, between tracks, where there is but little space (and never for high-speed movements), the return of the arm or blade to the stop position, in case of failure of the apparatus, is secured by means of a spring, instead of by the weight which is used in the full size semaphore. The dwarf signal is shown in Fig. 52. In this design the cylinder is movable and the piston stationary, the pressure pushing up the cylinder, against the downward pressure of the spring. This movement puts the arm down; and on the release of the air, when the signal is to be restored to the stop position, the spring forces the cylinder and its rod downward. The piston rod is hollow, thus serving as a port for the admission of air to the cylinder. The lamp is mounted on top of the post, so that the glasses (red for stop and green for go-ahead), are in a different position, as related to the arm, from that of the glasses in the full size semaphore. To provide against damage by contact with passing trains, the casting to hold the blade and the glasses is of malleable iron, and the blade itself is made of flexible rubber. In mechanical signals the use of a spring in the place of a counterweight would be deemed unsafe, as the breakage of a spring might cause a failure to give a stop indica-

Digitized by Google

tion; but in this system this danger does not exist, as, if the spring should fail to restore the signal to the stop position, the signal lever would be locked, by the electrical appliances, in the go-ahead position, thus compelling attention to the defect in the signal. This safeguard is accomplished by means of insulated metal plates attached to the signal cylinder, which at the proper time close an electric circuit controlling the lever in the cabin.

The electro pneumatic switch cylinder is shown in

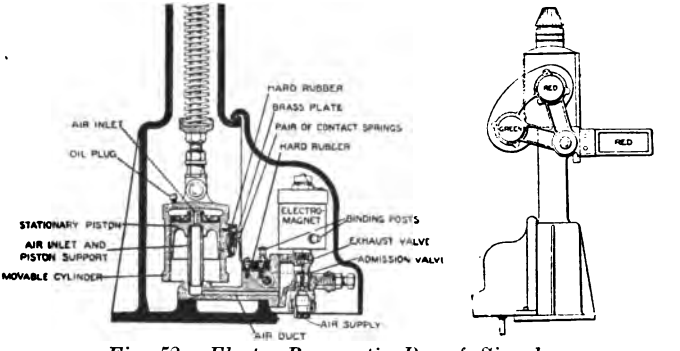

Fig. 52.—Electro-Pneumatic Dwarf Signal

Fig. 53, Inset No. 3. The electro-magnets for controlling the admission of air to the cylinder are clearly shown in the engraving. Each cylinder (and its piston) moves not only the switch but also the detector bar and lock; and two or more switches, near together, are moved by the same cylinder where it is found desirable to do so. This multiplication of functions is provided for by an increase in the size of the cylinder or

Digitized by Google

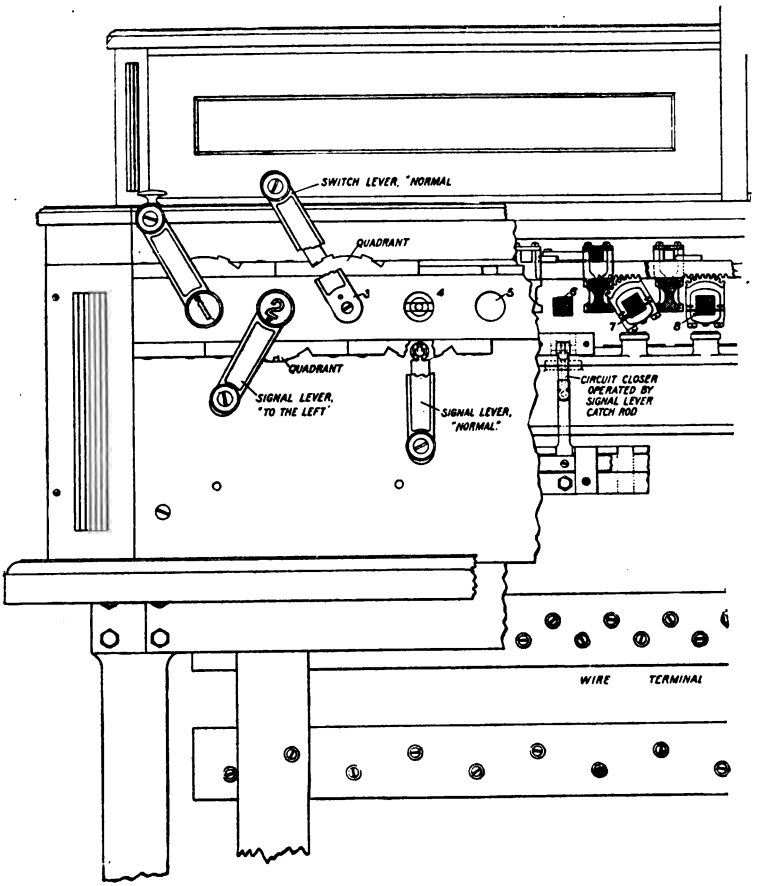

Fig. 55.—Part of Electro-Pneumatic Interlocking Machine

Digitized by Google

by a higher air pressure. This concentration of power is, indeed, one of the main advantages possessed by the power apparatus over machines worked by hand; and, moreover, each lever in the electro-pneumatic machine may be made to perform the functions usually performed by two separate mechanical levers, as each one can be moved either to the left or to the right from its normal position.

Portions of the electro-pneumatic interlocking machine are shown in Figs. 54 and 55, the former being a section from back to front. Fig. 55 is partly a front elevation and partly à section. The track model, which appears in section in the upper part of Fig. 54, is better shown in the perspective view of the machine. It consists of metal rods, representing a plan of the track. Each rod which represents a switch is movable, and is connected to the switch levers in such a way that every movement of the lever, to move a switch in the track, moves the corresponding part of the model. Some models have miniature signals as well as tracks.

The principal parts of the interlocking machine are suitably indicated in the transverse section, Fig. 54. The mechanical interlocking parts, supported by the locking bar brackets, are similar in design to the interlocking shown in Figs. 46 and 47. The whole apparatus is enclosed in a wooden case with glass top. The wire connections (not shown in the drawings), are all run to binding posts on the back side of the frame supporting the machine.

This sectional view is taken on the center line of a switch lever and shaft. A sectional view of a signal lever would be similar except that there might be no

Digitized by Google

connections to the track model, and there would be one electro-magnet at the back of the machine instead of two. In Fig. 56 is shown a rear view of a small machine. On the first hard rubber roller are seen five electric contact strips. The controlling magnets are below the plate at the right, and the back side of the track model is shown in the upper part.

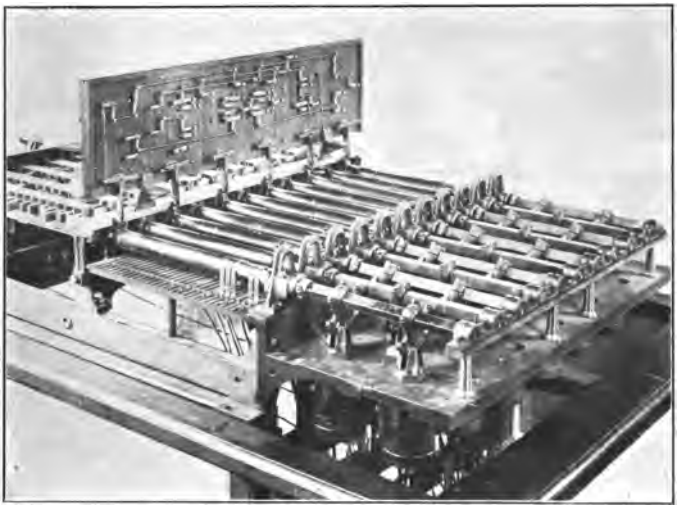

Fig. 56.—Electro-Pneumatic Interlocking Machine.—Back View with Covering Removed

The process of moving a switch may be briefly described as follows, taking, for example, lever No. 3, Fig. 55: All signals which could give a clear route over the switch in its present position being in the stop position, so that the interlocking will not interfere with the intended movement, the operator grasps

Digitized by Google

the lever and moves it to the right, revolving the shaft. As soon as this revolution has begun, the "driver" on the shaft (Fig. 54) has moved the locking bar a short distance, so as to lock all levers which, if they were to be moved, would permit trains to interfere with the intended movement. This locking effected, the further revolution of the shaft causes a copper strip to close the switch valve circuit, which, by means of the electro-magnet (Fig. 53) admits air to the switch cylinder. The piston movement produced by this air pressure unlocks the switch, moves it to the other position, and then locks it. The locking having been completed, the closing of a circuit in the indication box (Fig. 53) energizes its proper "indication magnet" (Fig. 54), and the operator is then able to finish the stroke of his lever, leaving it inclined to the right. This final movement pushes the locking bar the remainder of its stroke and unlocks the lever or levers by which the operator will clear the signal to permit a train to pass over the switch in its new position.

In Fig. 53 is shown the "switch and lock movement" by which the rod from the cylinder performs the double function of moving the switch and locking it. This device is similar in principle to the locking apparatus used with all kinds of interlocking, where such a combination of functions is desired; and a brief description of it in this place will, therefore, serve as a supplement to the descriptions which have been given of other kinds of interlocking. The principal parts are so lettered as to explain what they are used for. The flexible connection from the auxiliary reservoir to the cylinder is employed to provide against leaks due to

Digitized by Google

unequal pressure or settling on or in the different parts. The rod *a*, and the longitudinal moving part of the "movement," a^1, together with the detector bar connection a^2 are permanently connected, and may be treated as a single rod, which we will call *a*. This rod has a stroke of eight inches; but its action on the switch (by means of crank *b*) does not begin until it has moved about 2 in.; and the switch action is finished in the next 4 in. of the movement; so that the first two inches can be used to unlock the switch and the last two inches to lock it in its new position. The lock rod, where it passes through the frame, appears in elevation as in the figure below.

Rod *a* unlocks the switch by withdrawing a lug from the lower notch *y*, which lug is indicated in the elevation, Fig. 53, by dotted lines; and it locks, after moving the switch (and changing the position of the lock rod) by pushing another lug into the upper notch *x*. The vertical pin in a^1, which moves crank *b* is fitted with a loose collar.

The detector bar is provided to prevent the switch from being thrown while an engine or a car is on or near the switch. This bar, about 45 ft. long, with its edge upward, lies alongside one of the rails, and is so supported, on a series of arms ("links"), that, whenever a wheel stands above any part of it, it cannot be

Digitized by Google

lifted. It must be lifted about ¾ in. (and then dropped) whenever the switch is moved, or even unlocked, and, therefore, the presence of a car or an engine prevents any movement of the switch. The lifting is effected by the rod a^2 which is suitably connected. Pushing rod a^2 to the left pushes the detector bar to the right, so that the supporting links *d*, of which there are 10 or 12 for a 45-ft. bar, are pushed over, and left inclined to the right, instead of to the left.

Digitized by Google

CHAPTER XVI

THE LOW-PRESSURE PNEUMATIC SYSTEM

Interlocking apparatus worked by compressed air at low pressure (15 lbs. per sq. in.), and with no electrical features, is in use on the New York Central and a number of other railroads. It is made by the Standard Railroad Signal Company, of Troy, N. Y. Pressure is admitted to working cylinders by valves actuated by large rubber diaphragms, which diaphragms are worked by air at 7 lbs. pressure, this pressure being conveyed from a cabin 500 ft. distant, and even much farther, in one or two seconds. As in the electro-pneumatic machine, the "lever" of a switch cannot complete its stroke until the switch has actually moved home and conveyed an "indication" of the fact to the cabin. The interlocking is mechanical, the parts being made very small as in the Westinghouse machine. While the action of compressed air in pipes is not instantaneous, like an electric impulse, the movement of switches is effected quickly enough for all practical purposes; and at ordinary distances the movement of a signal is practically simultaneous with its lever.

The distinctive features of the low-pressure pneumatic interlocking machine are: (1) A row of slide valves (called "levers"), like that shown in outline at L and L^2, Figs. 58 and 59. As in the electro-pneumatic, the physical labor imposed on the signalman is inappreciable. (2) The mechanical interlocking frame, placed vertically, on the front of the machine. The

Digitized by Google

manner of connecting the "lever" with the interlocking is indicated by the position and arrangement of the tappet H in Fig. 58. (3) The indicating cylinders and their relays on each "lever," as shown in Figs. 58 and 59.

The appearance of the machine is shown in Fig. 57,

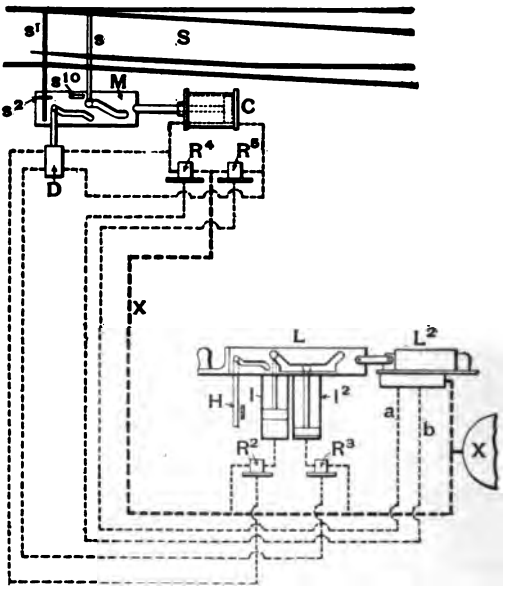

Fig. 58.—Switch Movement

and the way in which the pressure is conveyed and controlled is shown in Figs. 58 and 59. Fig. 58 represents the arrangement of valves and pipes forming the connection between the interlocking machine and a switch cylinder. The principal parts are: S, switch

Digitized by Google

Digitized by Google

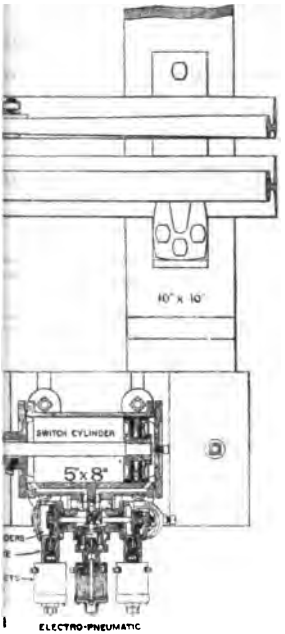

ELECTRO-PNEUMATIC
SWITCH VALVE
(COVER REMOVED)

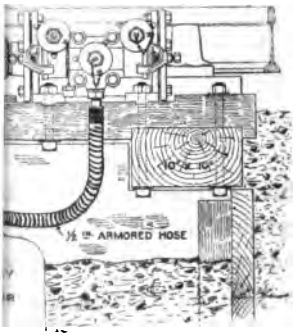

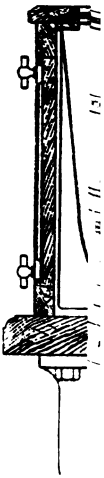

TRO-PNEUMATIC IN

Digitized by Google

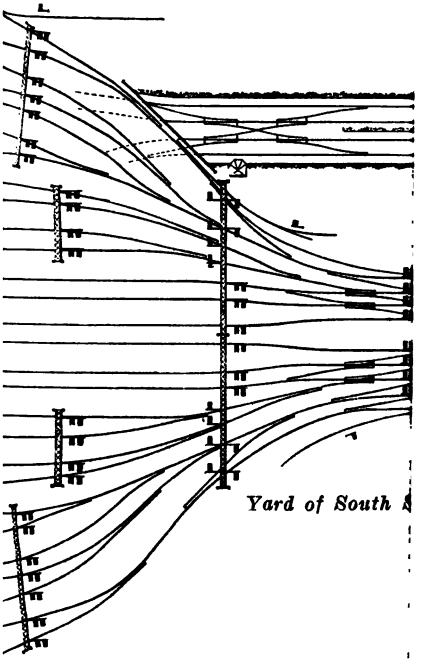

Yard of South

SECTIONAL VIEW OF MA

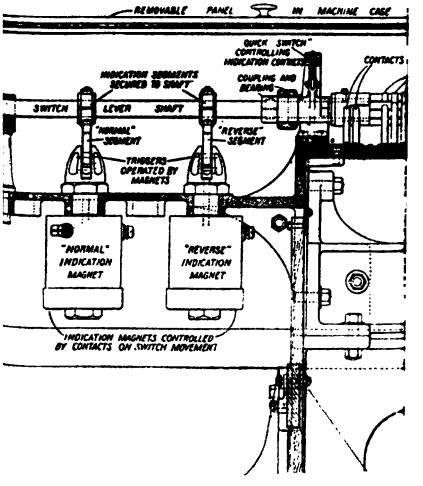

RLOCKING FOR SWI

Digitized by Google

Digitized by Google

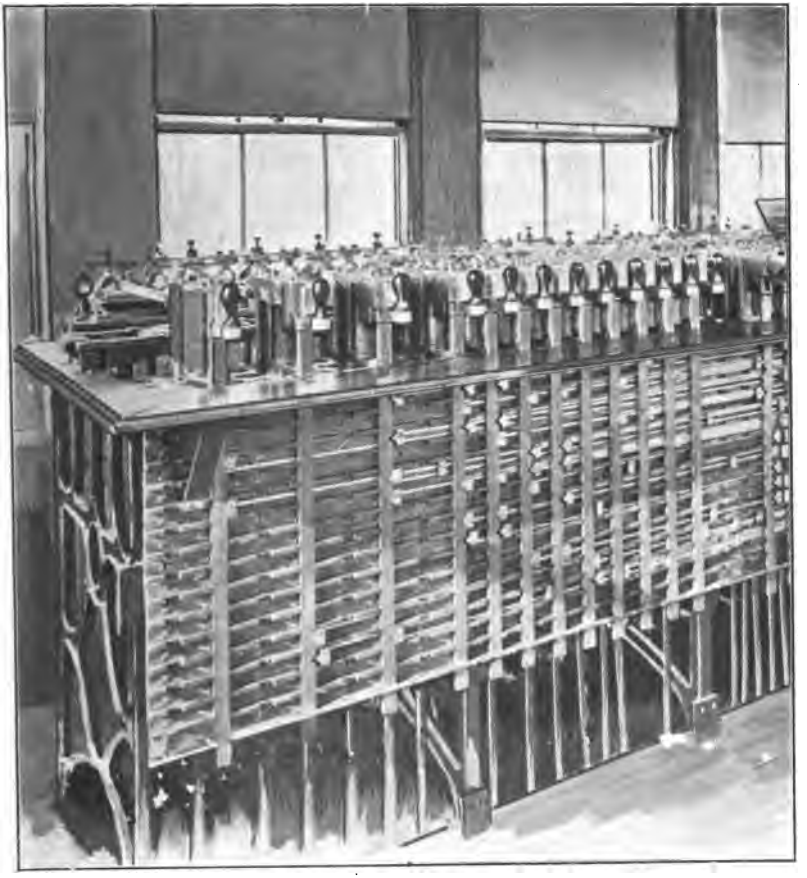

Fig. 57.—Low-Pressure Pneumatic Interlocking Machine

Digitized by Google

rails; s^1, lock bar; s, switch rod; M, motion plate; C, switch cylinder; D, indicating valve; R^2, R^3, R^4, R^5, controlling valves; L, L^2, operating bar and slide valve; I, I^2, indicator cylinders; H, interlocking tappet; X, air reservoir.

To change the position of the switch the signalman

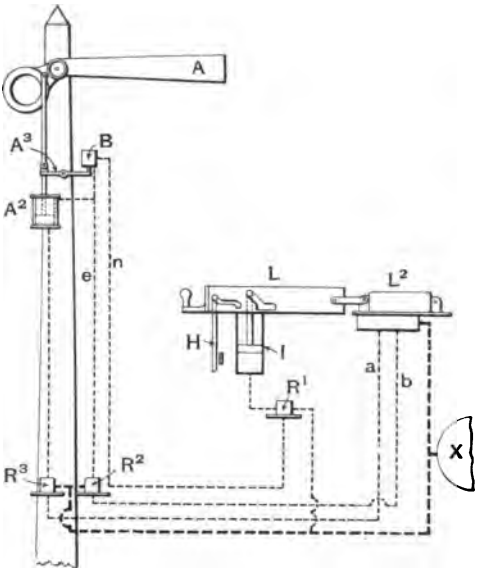

Fig. 59.—Signal Movement

grasps L by the handle and pulls it out. In doing this he admits air (from the main supply X through the valve L^2) through pipe *a* to valve R^5, which opens communication from the supply pipe X to the right-hand end of the cylinder C, pushing the piston to the left. Observing now the slots in L and M, it will be noted

Digitized by Google

that after about one-half of the stroke of L has been completed it is stopped by the piston rod of I^2; but the operation of valve R^5, already accomplished, causes M to move through the whole of its stroke. This stroke of M is uninterrupted, but it performs in succession three functions. The first part of the stroke, say one-third, does not move the switch, but valve D is moved far enough to close the two pipes on its right, while those on its left are open to the atmosphere. At the same time lock bar s^1 has

Fig. 60.—Diaphragm Valve

been liberated at s^2. As M moves through the next or middle portion of its stroke, it moves the switch; but it now produces no effect on valve D, because the rod of D is now engaged by the straight portion of its slot in plate M. The switch being set, the third and final part of the stroke of M locks the switch by pushing s^{10} through a hole in s^1; and also (but not until after s^{10} has entered its hole) the plate changes valve D so as to connect together the two pipes at its lower end. This conveys pressure from the supply through R^5 and D to

Digitized by Google

valve R^3, which valve then admits air from the supply to I^2, forcing the piston rod upward, and, by means of the diagonal portion of the slot in bar L, forcing this bar to complete its stroke. This return action takes place at ordinary distances in from one to three seconds. In rapid work, this automatic completion of the stroke of the bar saves an appreciable portion of the signalman's time.

Fig. 61.—Pneumatic Dwarf Signal

By the action of L^2 pipe *a* is now opened to the atmosphere. Valve R^5 is now released from pressure, and R^4 is closed; so that the right-hand pipe to cylinder C and its connection to and through D are open to the atmosphere. All four operating pipes are now at atmospheric pressure.

By the movement of L, tappet H has been moved so

Digitized by Google

as to produce the proper mechanical locking of conflicting levers (in the first part of the stroke of L) and the proper unlocking (in the last part of this stroke) in the same manner and sequence that the same interlocking would be effected in a wholly mechanically interlocking machine.

To move the switch back to its original position, the opposite set of pipes is used. The bar L is pushed to the right; air through *b* actuates R^4, and the return indication to the cabin actuates R^2 and lifts the piston in I.

To work a signal, valves and operating pipes are used of the same general style as those for a switch, but there is only one indicating valve and one indicating cylinder, as it is unnecessary to assure the attendant that a signal is in the go-ahead position. The signal connections are shown in Fig. 59. The principal parts are: A, signal arm; A^2, signal cylinder; A^3, lever to work indicating valve; B, indicating valve; R^2 and R^3, diaphragm valves, controlling the admission of air to the top and bottom, respectively, of the signal cylinder; R^1, diaphragm valve controlling admission of air to cylinder I. The signal being in the normal or stop position, the indicating valve B is in a position to maintain a connection between the two pipes attached to it; but the instant the signal arm leaves the horizontal position the valve shuts off this connection.

To change the signal the signalman pulls L to the left, the whole length of its stroke. By this movement L^2, admitting air to pipe *a*, actuates valve R^3, which supplies air to the lower end of cylinder A^2 and pushes up the piston, putting the signal in the inclined or all-

Digitized by Google

clear position. The air impulse is transmitted so quickly that at the average distance—say 500 ft. and less—the movement of the signal is practically simultaneous with the movement of the lever. The signal remains in the inclined position as long as L is pulled to the left. To restore it to the normal or stop position, L is pushed to the right until it is stopped by the piston rod of I (at the end of the horizontal part of the slot in L). With L in this position, pipe *b* is charged and valve R^2 is opened. The passage between pipes *e* and *n* (through B) is now closed, so that the opening of R^2 admits air from the supply to the upper end of A^2. This restores the signal to the horizontal position, and by means of A^3 opens valve B. Air now passes from *e* through B and *n* to R^1, and the latter causes air to enter I and complete the return stroke of L by the action of the piston rod on the diagonal part of the slot. Pipes *b*, *e* and *n* are now at atmospheric pressure, and the parts are in the same position as at the beginning.

In Fig. 60 is shown the diaphragm valve, which is called the "relay," its function being similar to that of an electro-magnetic relay in electrical apparatus. This valve is actuated by air at 7 lbs. pressure. This pressure, admitted beneath the circular rubber diaphragm 8 in. in diameter, pushes up the cylindrical valve, placed vertically in the upper part of the case, and thereby liberates air at 15 lbs. per square inch to move the piston in the switch or signal cylinder. The movement of the diaphragm is only ¼ in.

The operating and indicating pipes extending to switches and signals are ½ in. in diameter. The supply pipes from the air reservoirs are larger, the size being

Digitized by Google

Digitized by Google

Digitized by Google

varied according to the number of switches and signals to be supplied.

The air as it comes from the compressor is run through a cooling frame for the purpose of precipitating moisture; but with low pressure there is practically no trouble from moisture in the pipes.

A low pressure pneumatic machine of 180 levers is used to work the switches and signals in the yard of the Grand Central Station, New York City, a diagram of which is given on Inset No. 4. This station is the terminus of the passenger lines of the New York Central & Hudson River and the New York, New Haven & Hartford. This yard, one of the busiest in the country, was for many years signaled with mechanical signals.

The machine in the cabin or tower at 47th street works, besides the switches and signals shown, 28 switches and 22 signals to the left (north) of 48th street, which street forms the left-hand boundary of the diagram. In the drawing the heavy shading at the switches shows the normal position of each. For example, switch No. 115, near one of the baggage lifts, stands normally in position for the straight line, not the diagonal one. Switch No. 92, near the upper left hand corner, stands normally for the straight track; switch No. 140 stands normally for track D. Since this diagram was made, tracks Y and Z have been extended so that they join one another. This yard is the terminus of a four-track railroad, but at the entrance of the yard it is necessary, on account of lack of room, to run all of the trains over two tracks, one inward and one outward. The main inbound track is No. 1, and the outbound is H. Trains run on the left-hand track be-

Digitized by Google

tween this terminal and the junctions a few miles out. The signals and switches marked "fly" are used for inward trains which, before they are run into the station are separated from their engines. A train approaching signals 66, 67, 68 and 70 on track No. 1 receives notice about 600 ft. back, by a two-arm signal, whether or not a "fly" switch is to be made; and, when it is made, two arms, 68 and 70, or 67 and 70, are pulled down at the same time. When a fly switch is made, the engine is run to track No. 9 and the cars are diverted either to the left at switch 71 or to the right at switch 72.

Digitized by Google

CHAPTER XVII

ELECTRIC SWITCH AND SIGNAL APPARATUS

The Taylor Signal Company, of Buffalo, N. Y., has lately (1900) introduced switch and signal machines moved and controlled entirely by electric power. The interlocking is mechanical, similar to the Johnson type, placed in an upright frame on the front of the machine. The switch movement, with a cover to protect it from the weather, is fixed on a sleeper close to the switch, and signal motors are placed on the signal posts. Electric circuits passing through the rails are used in the place of detector bars.

Electricity, from a 60-volt storage battery, is the power for all the functions in this interlocking, except the rail-circuits, which are worked by gravity batteries in the ordinary way. Current from the storage battery is used only while switches or signals are being moved, so that the consumption is very small; and the motor (gasoline) which is used to charge the accumulators need be run only a small part of the time.

As in other power interlocking there is an "indication," acting on the lever in the cabin, to indicate to the signalman that the stroke of the track rails is completed, and permit him to finish the stroke of the lever.

The switch motor is shown in Fig. 63. Through the gearing shown the motor M, turning 20 revolutions in about 1½ or 2 seconds, revolves wheel 1 one revolution to make one stroke of the switch. The switch is connected by rod 2, pivoted at a to cam movement, 3, re-

Digitized by Google

volving on pin *b*. Crank-pin *c* on wheel 1 besides moving the switch by means of the cam, moves the lock directly by rod 4, connected to the lock through 5 and 6. To the end of 6 (7) may be attached, if desired, a crank to work a mechanical detector bar. In the elevation a detector bar is shown. The lock bolt 6 is withdrawn from lock rod 9 before rod 2 begins its stroke, and it is reinserted after 2 has come to rest. The switch being locked, the final movement of the lock bolt causes the reversal of electric switch 10 which opens the power circuit and closes the indication circuit. The power for moving this circuit closer or switch is furnished by the spiral spring encircling its rod. The spring is compressed by the movement of rod 9 and, at the proper moment, by the final movement of lock bolt 6, is released so as to close 10.

When a switch movement is completed and the motor circuit is broken the motor is at the same moment converted into a generator. This is done by closing the indicator circuit (at 10) and this current, generated by the motor, lasting only a fraction of a second, is what gives the indication.

The movement of the switch back to its original position is accomplished by turning wheel 1 in the opposite direction, the movements of the cam being the same as before, but in reverse direction. The polarity of the motor was changed (by the preceding movement) at 10. If a motor should run too long it is automatically thrown out of gear. For single switches or derailing switches a 1-h.p. motor is used, but the power required is usually only 7 amperes at 60 volts.

A signal motor is $^1/_6$ h.p. It puts its signal in the

Digitized by Google

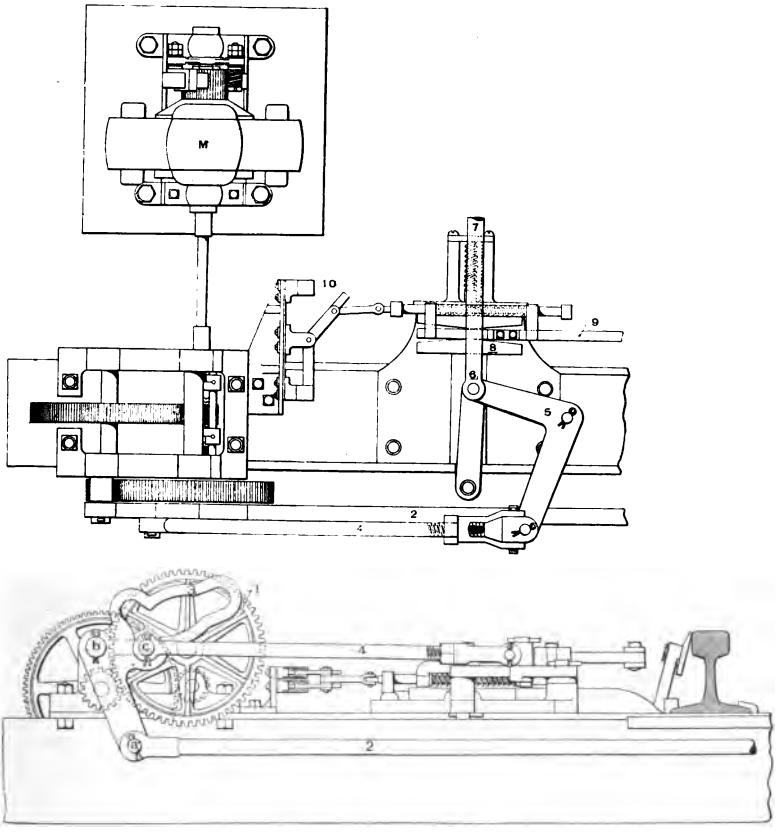

Fig. 63.—Taylor Electric Motor for Switch

Digitized by Google

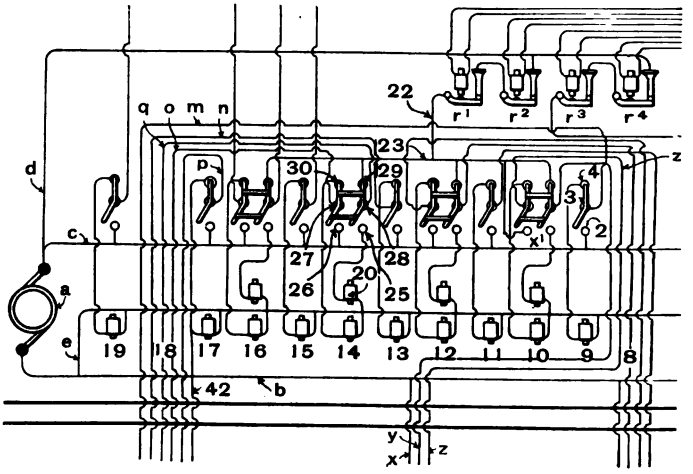

Fig. 65

all-clear position by winding up a chain which lifts the weighted end of the balance lever, pushing up the signal rod. This winding up requires about 2 amperes. When a signal has been put in the clear position a pole changer operates as at 10 on the switch machine, closing a circuit through a brake magnet to hold the signal down. The motor is at the same time de-energized. To return the signal to the stop position the brake magnet is de-energized and the counter-weight causes the blade to take the horizontal position. The brake magnet requires only .1 ampere.

In Fig. 64 *a* is a motor for two signals, and *b* is a motor for a derailing switch (14) on a track approaching a grade crossing of another railroad. The signal has two arms, for the reason that there is a diverging track (10) just before reaching the crossing. The wires *m*, *n*, *o*, *p*, *q*, *x*, *y*, *z* and 42 lead to the machine in the

Digitized by Google

cabin, which is described in connection with Fig. 66. Magnets *c* and *d* are fixed to the signal post and one or the other, according to which circuit is closed, causes a hook to engage the rod for working the appropriate signal. The circuit closer to open the motor circuit and close that to the electric brake is represented at *c*. At

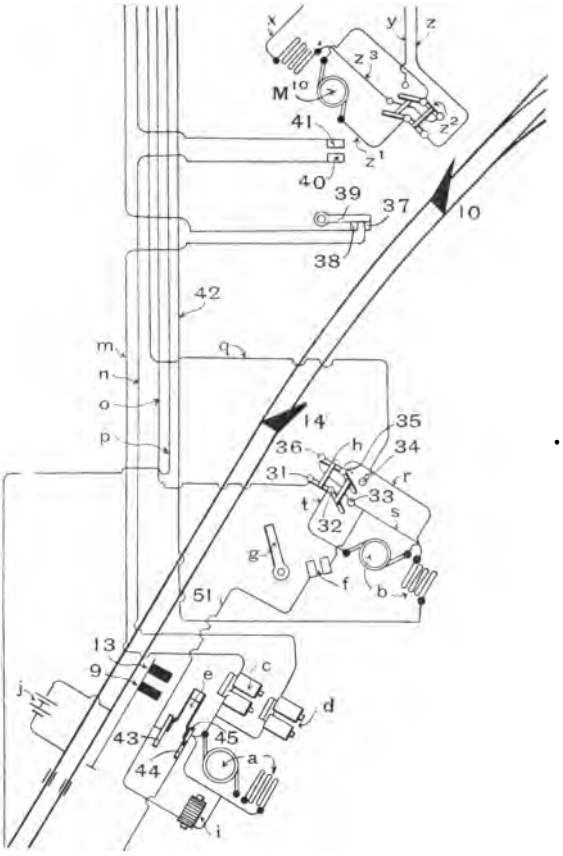

Fig. 64

Digitized by Google

f are shown contact points inserted in the main wire, as an additional safeguard to insure that a high speed signal shall never be given with a facing-point switch or a derail open. When the switch or derail is closed the points *f* are closed by *g*. The pole changer is shown at *h*; *i* is the brake magnet and *j* is the track circuit battery.

In Fig. 65, *a* is the generator (or storage battery) for supplying current to the principal circuits; *b*, *c*, *d* and *e* are principal lead outs; *m*, *n*, *o*, *p* and *q* correspond with the same letters in Fig. 64; r^1, r^2, r^3, r^4 are track relays.

A view of an interlocking machine is shown in Fig. 62. In this cut "levers" (bars) with handles extending upward are for switches, and those with downward handles are for signals. A switch lever, when moved, opens two circuits and closes two; the signal lever opens one and closes one.

The vertical tappets which do the interlocking are actuated by the movements of a slot in the lever. (See *s*, Fig. 66.) Fig. 66 is an outline drawing of a "lever" and its connections (with handle broken off).

The "indication" acts by means of the solenoids *M* and M^1, Fig. 66. When a switch (having completed its stroke) energizes one or the other of the pairs of solenoids *M* or M^1, the movement of the armature *f* controls the bar *B*, supported by *L* and pivoted at *a*. The armature *f* is rigidly fastened to the cores of the magnet.

In Fig. 66 the lever *L* has been pushed in about three-fourths of its stroke. The first part of the stroke, by the action of the upper left hand portion of slot *s* has depressed tappet *t* far enough to lock all conflicting

Digitized by Google

levers. During the intermediate part of the stroke, while the pin of the tappet is in the horizontal portion of slot *s* the lever *L*, through bars *B* and *r*, has changed the circuit closer or controller from the "reverse" to the "normal" position (using these terms in the sense common in interlocking practice). The controller being normal, it sends a current to the switch motor, changing the track-rails to normal. This being accomplished,

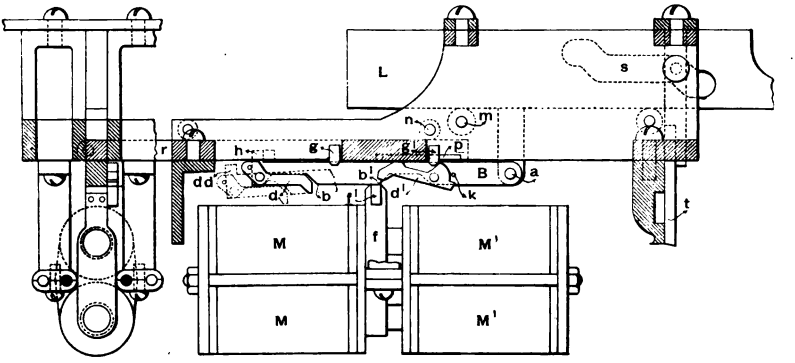

Fig. 66

the "indication," sent back from the switch, as before described, energizes magnet M^1. This attracts armature *f* and permits bar *B* to drop out of notch *h*, by which it moves bar *r*; the operator can then push *L* the remainder of its stroke, forcing tappet *t* farther down and thus unlocking such levers as it is proper to unlock after the movement of this switch. In case the indication should not come (as would be the case if the switch rails should fail to move "home") and *L* is pulled

Digitized by Google

back towards the position from which it started, the pawl *d* engages the lug f^1 on the side of armature *f* and pushes the armature to the right; *d* is then lifted over f^1 by striking against another lug, *g*, extending downward from the frame. The pushing of *f* to the right prevents *B* from dropping without being released by an indication current. If there is a failure to indicate on this side also, and the operator makes a second attempt to move the switch by again pushing in *L* the dog d^1 will push *f* to the left. Bar *B* can never drop except after *M* or M^1 has pulled *f* out from under the point b^1 or *b*. It is possible to move the lever inward to the full extent of its stroke after having moved it partly outward, but it is impossible to move it through the last part of its stroke in either direction without getting a release by means of the "indication."

The dotted lines at *dd* indicate the position of bar *B* when it is disengaged from *r*. Rollers *m* and *n* support or guide the sliding bars. The function of the recess at *p* is to limit the motion of sliding bar *r*.

The movement of the switch in the opposite direction is effected in the same manner as here described, but by pulling instead of pushing lever *L*.

The dwarf signal Fig. 67, is worked by a pair of solenoids *S*, S^1. These, being energized by a current from the cabin, lift the connecting bar *B*, force up the signal rod *R* and clear the signal. A spring in the column, *C*, returns the arm to the horizontal position when the current is withdrawn. In this signal the indication current is closed by the contact points shown between the solenoids. Just before the signal reaches the clear position the low-resistance winding of the

Digitized by Google

solenoid is automatically put in series with the high resistance, so that the signal is held at all-clear by ¼ ampere, although a current of six amperes was used to move it.

The arrangement of the connections between a lever and its switch or signal can be seen by an examination

Fig. 67.—Dwarf Signal

of Figs. 64 and 65. Take, for example, switch No. 10. On closing the contact points at x^1, Fig. 65 (lever No. 10) current from the supply *a* flows through wire *d*, forward stops and armatures of relays r^2 and r^1 (in series) contacts of circuit controller x^1, wire *z*, pole changer z^2 (Fig. 64) motor of switch No. 10, wires *x* and *b* back

Digitized by Google

to generator *a*. Motor M^{10}, being actuated, moves the switch. The movement of the switch changes the connection at z^2, so that the next movement of lever 10 will send a current through *y* instead of *z*.

The control of this lever by the rail-circuit is effected through track relay r^2, Fig. 65, which is actuated by a current from battery *j*, Fig. 64, which flows through the track from signal 9-13 to the crossing beyond switch 10. The armature of r^2, when dropped, in consequence of the presence of a train on the track between *j* and the crossing, opens the circuit through which the signalman works switch No. 10.

Both the "normal" and "reversing" circuits of switch No. 10 are taken through the contacts of the relays r^1 and r^2 because a train may pass over this switch in either of its positions. Only the "normal" circuit of a derailing switch is taken through the relay contacts because a train is not to run over a derail when "normal" and it may be desirable to "reverse" it with a train on the track section.

The connections to switch 14 and signal 9-13 may be traced in Figs. 64 and 65. To reverse switch No. 14, or in other words to set for the main track, lever 14 is reversed (pulled out) which puts the arms 27 and 28, Fig. 65, in contact respectively with blocks 26 and 25. This closes a circuit from generator *a* through wire *c*, block 26, arm 27, wire *o*, contact block 31 (Fig. 64) arm 32, armature of motor *b*, arm 35, block 36, wire *s*, field coils of motor *b*, wire 42, back to generator *a*. When the switch is completely closed and locked the pole changer *h* is thrown over so that arms 32 and 35 are taken away from 31 and 36 and put into contact with the blocks 33

Digitized by Google

and 34 respectively. This closes a circuit from the switch motor to indication magnet 20, (Fig. 65) through wire *r*, arm 35, block 34, wire *q*, arm 28, block 25, magnet 20, wires *e* and 42 to field coils of motor *b*. This

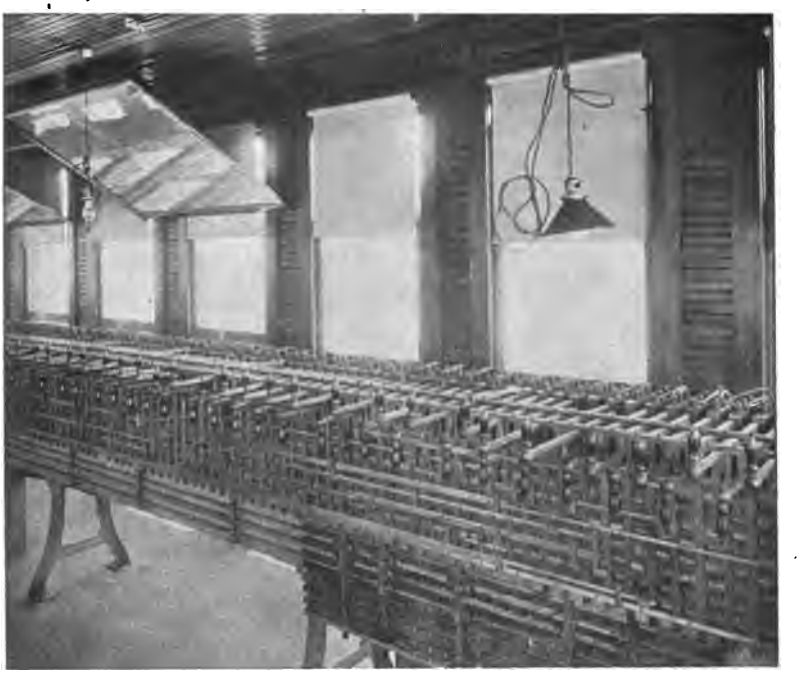

Fig. 62.—Part of Taylor Electric Interlocking Machine

energizes the magnet 20 and releases latch *B* (see Fig. 66) so that lever 14 can be pulled to the end of its stroke. This final movement of lever 14 releases lever 9.

Reversal of lever 9 puts the arm of the electric controlling switch 3 (Fig. 65) into contact with block 2. This closes a circuit from generator *a* through wire *c*,

Digitized by Google

block 2, arm 3, wire *m*, contacts 38, 39, 37, controlled by the rails of switch No. 10; it continues through wire *m*, magnet *c*, signal motor *a* and signal circuit controller *e*, wire 51, controller *f g*, operated by switch No. 14, wire *s*, field coils of switch motor *b*, wire 42, back to the generator *a*.

When the signal arm has moved to all-clear the circuit controller *e* is moved so that it no longer connects 43 and 45; but the above described circuit is shunted around this break by the brake magnet *i*. This holds the signal in the all-clear position as long as lever 9 remains reversed. The movement of the circuit controller *e* when the signal goes to clear, connects contacts 43 and 44, thus closing the circuit to the distant signal. This circuit thus depends on the home signal being clear.

When lever 9 is put back into its normal position arm 3 is put into contact with block 4. Then as the signal returns to its normal position the last part of the movement of the blade replaces circuit controller *e* so that it connects 43 and 45. This closes the circuit containing the signal motor *a* and the indication magnet 9 in the cabin. The signal motor armature is rotated by the fall of the blade, and the current generated by this rotation flows through wire *m*, arm 3, block 4, magnet 9, wires *e* and 42, field *b*, (Fig. 64), wire *s*, points *f* and 43, circuit controller *e*, field coils of the signal motor *a* and back to the armature. This current serves the purpose of retarding the fall of the counter-weight of the signal and also of energizing the indication magnet 9 (Fig. 65) which releases the latch and permits lever 9 to be moved through the final portion of its stroke.

THE END

Digitized by Google

LIST OF ILLUSTRATIONS

FIG. NO.		PAGE
1.	Typical block section	9
2.	Semaphore signal	8
3.	Semaphore signals	8
4.	Signal bridge	12
5.	Signal bridge	12
6.	Arrangement of signals at a station	13
7.	Arrangement of signals at a station	14
8.	Arrangement of signals at a station	15
9.	Three-position signal	16
10.	Three-position signal, Grafton design	16
11.	Cross-over track	21
12. 13.	Bell circuits for block signaling	28
14.	Block signal station without a side track	29
15.	Protected side track, Erie Railroad	30
16.	Electric circuits for switch lock	32
17.	Block signals on three-track line	34
18.	Three-position signal, Mozier's	53
19.	Three-position signal, Atchison, Topeka & Santa Fe	58
19a.	Coleman block signal instrument	63
19b.	Coleman block signal instrument	67
19c.	Coleman block signal instrument	69
—	Coleman block signal apparatus (See inset No. 1).	
20.	Electrically controlled signal lever	83
20a.	Electrically controlled signal lever, detail	85
20b.	Electrically controlled signal lever, detail	86
21.	Electric slot	89
22.	Electric slot	89
22a.	Electric slot	87
23.	Semaphore for permissive block signaling	91
24.	Circuits for Leonard's lock-and-block apparatus	95
25.	Automatic disk signal, clock work	110
26.	Diagram of rail circuit	108 109
27.	Diagram of rail circuit with overlap	113

Digitized by Google

FIG. NO.		PAGE
28.	Enclosed disk signal	118
29.	Electro magnet for enclosed signal	118
	Hall signals on Philadelphia & Reading	119
	Hall signals on Illinois Central	120
	Union enclosed disk signal	121
	Hall signal magnet	122
30.	Circuits for automatic signals on single track	127
31.	Circuits for automatic signals on Illinois Central	143
32.	Circuits for automatic signals, detail	144
33.	Circuits for electro pneumatic automatic block signals	131
34. 35 36.	Electro pneumatic semaphore	133
37.	Relay for automatic block signal	134
38.	Signal bridge on Pennsylvania Railroad	137
	Electric Automatic Semaphore	145
39.	Arrangement of three-position automatic block signals	146
40.	Signal bridge on Pittsburgh, Ft. Wayne & Chicago	149
	Three-position signals on Pittsburgh, Fort Wayne & Chicago (See inset No. 2)	
41.	Saxby & Farmer interlocking machine	175
42.	Switches and signals at a crossover	174
42a.	Switches and signals at a crossing	181
43.	Compensator	185
44.	Jones wire compensator	187
45. 46. 47.	Saxby & Farmer interlocking machine	179
48.	Johnson interlocking machine	190
49.	Johnson interlocking machine, details	191
	Standard interlocking machine	192
	South Station, Boston (See inset No. 3).	
50.	Electro pneumatic interlocking machine	195
51.	Signal bridge at South Station, Boston	196
52.	Electro pneumatic dwarf signal	198
53.	Electro pneumatic switch movement (See inset No. 3.)	
54.	Electro pneumatic interlocking machine (See inset No. 3).	
55.	Electro pneumatic interlocking machine, front view	199

Digitized by Google

FIG. NO.		PAGE
56.	Electro pneumatic interlocking machine, back view	201
57.	Low pressure pneumatic interlocking machine	207
58.	Diagram of pneumatic switch movement	206
59.	Diagram of pneumatic signal movement	208
60.	Diaphragm valve	209
61.	Pneumatic dwarf signal	210
	Grand Central Station, New York (See inset No. 4).	
62.	Electric interlocking machine, Taylor's	225
63.	Taylor electric motor for switch	217
64.	Switch and signal connections for electric machine.	219
65.	Wiring of electric interlocking machine	218
66.	Lever-control—electric interlocking machine	221
67.	Taylor dwarf electric signal	223
501. 502.	Webb & Thompson electric train staff	99
503.	Interlocking of train staff and semaphore	103
504.	Crane for electric train staff	104

Digitized by Google

Digitized by Google

INDEX

PAGE

"American Practice in Block Signaling"..... 3
Atchison, Topeka & Santa Fe..... 57
Automatic Block Signals..... 107
Automatic Block Signals on Single-Track Lines..... 124
Automatic Block Signals, Cost of..... 168
Automatic Three-Position Signal..... 146
Battery, Storage, for Signal..... 147
Bell Signals on Erie Railroad..... 28
—Code for..... 27
Block Signaling; Comparison of Different Methods..... 160
Boston, South Station.....*Inset No. 3* and 196
Bridge for Signals.....12, 137, 149
Canadian Pacific..... 37
Chesapeake & Ohio Railway.....93, 103
Chicago & North Western Railway..... 167
Chicago, Burlington & Quincy Railroad..... 33
Chicago, Milwaukee & St. Paul; Rules for Telegraph Block System 41
Cincinnati, New Orleans & Texas Pacific Railway..... 124
Clearance Card..... 44
Clock-work Signal..... 108
Coleman's "Controlled Manual" Instrument..*Inset No. 1* and 62
Colors of Night Signals..... 139
Compensators for Rod Connections..... 185
Compensators for Wire Connections..... 185
Compensator, Wire, Jones'..... 186
Contents, List of..... 5
Controlled Manual System..... 60
Cost of Telegraph Block System..... 23
Cost of Automatic Block Signaling..... 23
Counterweight 9
Crane for Train Staff..... 104
Crossing, Interlocking for..... 182
Crossover Track, Rule for Using.....21, 46
Crossover, Interlocking for..... 174
Defects of Automatic Signals.....116, 123
Detector Bar..... 203
Detector Bar, Substitute for..... 215
Derailing Switch..... 182

Digitized by Google

PAGE

Disk Signals, Three-Position 90
Disk Signal, Union Automatic 108, 110
Disk Signal, Union, Enclosed 122
Disk Signal, Hall, Enclosed 118, 122
Distant Signal Controlled by Polarized Relay 136
Drawbridges, Signals for 184
Dwarf Signal 197, 210, 222
Electric Interlocking Machine 215
Electric Locks for Crossing Signals 183
Electric Locks for Distant Signals 183
Electric Lock for Outlying Switch 31
Electric Motor for Switch 217
Electric Semaphore 140, 145
Electric Slot 86
Electro-Pneumatic Automatic Block Signals 129
Electro-Pneumatic Interlocking ..... *Inset No. 3* and 194
Enclosed Disk Signals 118
Erie Railroad 26, 28, 29, 51
Foundations, Concrete 184
Fourth Avenue Tunnel, New York 90
Grafton's Three-Position Automatic Signal ..... *Inset No. 2* and 146
Grand Central Station, New York ..... *Inset No. 4* and 213
Illinois Central Railroad 120, 140, 143
Interlocking, Principles of 175
Interlocking Machine, "All-Air" 205
—Electric 215, 225
—Johnson's 189, 191
—Pneumatic, Low-Pressure 205, 207
—Saxby & Farmer 173, 175, 179
—Standard Railroad Signal Company's 192
—Taylor's 215, 225
—Union Switch & Signal Company's (S. & F. type) 173, 175, 179
—Vertical 189, 192
—Westinghouse Electro-Pneumatic ..... *Inset No. 3* and 194
Johnson Interlocking Machine 189, 191
Jones' Wire Compensator 186
Lamp Indicators 91
Lazy Jack Compensator 185
Leonard's Controlled Manual Instrument 93
Light Traffic, Block Signaling for 38
Lights for Night Signals 139
Location of Automatic Signals 116
Location of Manual Signals 13
Lock-and-Block Apparatus 60
Lock, Electric, for Crossing Signals 183

Digitized by Google

PAGE

Lock, Electric, for Distant Signals..... 183
Locking Sheet for a Crossover..... 174
Low-Pressure Pneumatic Interlocking Machine.....205, 207
Manual Signaling (See Telegraph Block System)..... —
"Manual Controlled" System..... 60
Mileage of Railroads Using Block Signals.....170, 171
Motor, Electric, for Semaphore..... 140
Motor, Electric, for Switch..... 217
Mozier Signal..... 52
New York, Grand Central Station.....*Inset No. 4* and 213
—Park Avenue Tunnel..... 90
Night Signals, Colors of..... 139
"Overlapping" Track Circuits..... 113
Park Avenue Tunnel, New York..... 90
Passing Side-Track on Erie..... 30
Patenall's Apparatus..... 90
Pennsylvania Lines West of Pittsburgh..... 146
Pennsylvania Railroad.....7, 17, 19, 167
Permissive Block Signaling.....15, 34, 42, 96
Permissive Card..... 42
Philadelphia & Reading Railway.....119, 167
Pittsburgh, Fort Wayne & Chicago Railway..... 146
Posts, Bracket.....12, 34
Preface 3
Rail Circuit..... 108
Railroads, Names of, Using Block Signals.....
.....59, 60, 114, 129, 145, 170
Record of Trains at a Block Station..... 11
Relay for Automatic Signals..... 134
Relay, Polarized, for Distant Signal..... 136
Rules for Block Signaling.....17, 41, 56, 114, 126
Saxby & Farmer Interlocking Machine.....173, 175, 179
Semaphore Signal 8, 53, 90
Semaphore, Automatic.....131, 133, 140, 146
Semaphore for Permissive Signaling..... 90
Semaphore, Three-Position.....16, 53, 58
Semi-Automatic Signals..... 157
Service, Records of..... 167
Signal (See also Semaphore, Disk, dwarf, etc.)..... —
Signal, Distant..... 14
Signal, Dwarf.....197, 210, 222
Signal, Starting or Advance..... 14
Signals at South Station, Boston..... 196
Signals, Location of.....13, 115
Signalmen, Wages of..... 24

Digitized by Google

PAGE

Single-Track Block Signaling, Automatic..... 124
—Manual 36, 51, 93
Single-Track Block Signaling on Erie Railroad.....29, 51
"Slot," Electric..... 86
South Station, Boston.....*Inset No. 3* and 196
Staff, Electric Train..... 97
Switch, Electric Control of..... 31
Switch and Lock Movement..... 202
Switch and Signal Machine (See Interlocking Machine).... —
Sykes Apparatus.....60, 90
Taylor Interlocking Machine..... 215
Telegraph Block System..... 7
Telegraph Block System, Cost of..... 23
Telephones in Block Signaling..... 59
Three-Position Semaphore Signal.....53, 146
Three-Position Disk Signals..... 90
Time-Interval Rules..... 161
Track Circuit..... 108
Train Orders, Delivery of, to Moving Trains..... 55
Train Staff, Electric..... 97
Train Staff and Semaphore Electrically Interlocked..... 103
Tunnel, Park (Fourth) Avenue, New York..... 90
Union Clock-Work Signal..... 108
Union Switch & Signal Company's Interlocking Machine
(Mechanical) 173, 175, 179
Wabash Railroad..... 56
Wages of Signalmen..... 24
Webb & Thompson's Electric Train Staff..... 97
West Shore Railroad (N. Y. C. & H. R.)..... 25
Wire Compensator, Jones'..... 186
"Wireless" Automatic Distant Signals..... 136
Westinghouse Automatic Block Signals..... 129
Westinghouse Electro-Pneumatic Interlocking Machine.....
.....*Inset No. 3* and 194
Yellow Lights for Night Signals..... 139

Digitized by Google

HIGHWAY CROSSING ALARMS.

The various Signal Systems above described are designed and installed for the protection of human life as well as the expensive freight and machinery of the trains and to prevent accidents from collisions or misplaced switches. Other points of danger along any railroad are the unguarded public highways, where numerous accidents occur almost daily, resulting in the sacrifice of human life and property and heavy monetary expense to the company, as is evinced by the records in the office of the claim agent.

Several methods of guarding against these accidents at highways are in use, the most common methods being the use of safety gates, attended by flagmen or automatic electric signals, which sound an alarm at the crossing on the approach of the trains. The large first cost of installing gates and suitable houses at highway crossings, together with the annual expense necessary to pay crossing watchmen, has resulted in a desire on the part of railroad officials to seek some cheaper, more economical and, if possible, more efficient means of guarding the highways. This means is found in the *Highways Crossing Alarm.*

For the benefit of those who are unfamiliar with the mechanism and operation of the Highway Crossing Alarm a short description is herewith submitted.

Digitized by Google

A successful Highway Crossing Alarm should embody the following features:

First—It should sound the alarm as long as there is any element of danger approaching the crossing.

Second—This alarm must be given whether there be one or more trains on one or more tracks, or whether approaching in one or more directions.

Third—The alarm should continue to sound until the

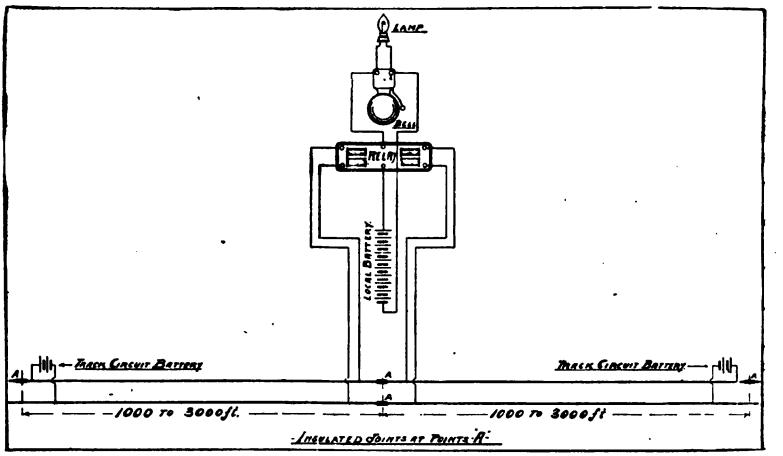

Fig. 65.

last wheel is past the highway, making every employee a witness to the fact that the bell was ringing.

Fourth—The system should be so arranged that no false alarms can be given.

Fifth—It should be visual as well as audible.

Sixth—If it is desirable, for any reason, to stop the bell when the engine crosses the highway, the alarm should then be so arranged that the signal will be given immediately after the train has passed the highway, if other trains are approaching.

Digitized by Google

Seventh—Any failure of the track circuit or its appurtenances should indicate itself immediately by ringing the bell.

Eighth—There should be no moving parts except the armatures of the relay and bell, no weights to be wound up, no mercury contacts to get out of order and no freezable batteries.

Ninth—The apparatus should be so simple that any lineman can install and maintain, and the adjustment be made with an ordinary screw driver and wrench.

Fig. 60.

The Chicago Crossing Signal is constructed for the purpose of protecting highway crossings, and consists essentially of three parts:

First—Track circuit, with the necessary batteries.

Second—The relay.

Third—The local circuit, consisting of battery, bell and electric light.

The general arrangement of the wiring system is shown in Fig. 65. Fig. 66 illustrates the relay, which is very similar to the ordinary telegraph relay, the adjustments

Digitized by Google

being identical. All parts are mounted on a highly polished slate base. The magnets are encased in a hard rubber weatherproof casing. The metal parts are heavily lacquered and the electric contact points, of which there are but three (3), are made of extra hard platinum to resist mechanical and electrical wear.

The electric contacts on the relay have a mechanical sliding motion, making them self-cleaning. All nuts and screws, as well as all other parts, are interchangeable.

The binding posts are of the ordinary lock nut pattern to obviate any chance of loose connections.

Fig. 67.

Fig. 68.

The relay is usually placed in an iron relay box, as shown in Fig. 67, on the same pole with the bell, about four (4) feet from the ground, where it is easily accessible for inspection.

The bell, which is illustrated in Fig. 68, is placed on the same pole with the relay, usually about fifteen (15) feet above the ground, which has been found more satisfactory in practice than placing the bell at a lower elevation.

Digitized by Google

It is out of the way of mischievous boys and up where the sound will be carried to a greater distance.

The mechanism of the bell, which is extremely simple, is inclosed in a weather-proof iron casing, shown in the top of cut Fig. 68. The gong is twelve inches in diameter, made of crucible steel, giving it a tone of great penetrating quality. The mechanism consists of a pair of powerful electro-magnets, wound so as to give a powerful stroke, using a minimum amount of current. The electric contacts are triple sliding contacts, self-cleaning, and are made strong and durable.

Fig. 69.

The battery operating the bell is placed in an iron covered receptacle at the base of the pole. The track batteries, which are the ordinary telegraph type, are placed in a frost and water proof cast iron chute, illustrated in Fig. 69. The cover is illustrated in Fig. 70. This chute is simple in its construction, affording a perfect protection to the wires, where they enter. The cover is fastened by a strong lock rod, which passes through the top of the chute and the flange of the cover, all of which is clearly shown in Fig. 70.

Channel Pin.

The track circuit is bonded at each joint with a pair of No. 8 wires, placed underneath the angle bar and attached to the rails by means of channel pins driven through the web of the rail, thus insuring perfect electrical contact.

Digitized by Google

In many instances, especially where crossing signals are installed at highways distant from the station, as in small towns, an annunciator (Fig. 71) can, at a small additional cost, be placed in the office of the

Fig. 70.

Fig. 71.

agent or operator, giving visual and audible indication to the agent that a train is approaching and the bell ringing.

A standard installation at a single track crossing and the operation of the bell are shown in Fig. 72, which shows

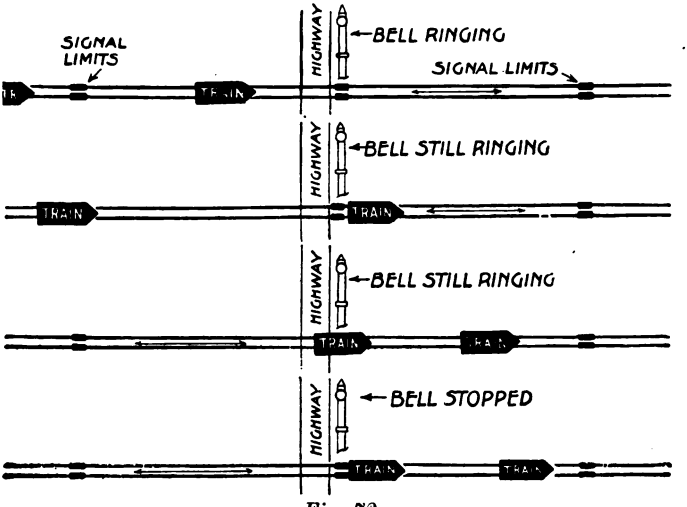

Fig. 72.

Digitized by Google

two trains approaching the crossing. This diagram shows the importance of ringing the bell until the last pair of approaching trucks have passed the crossing.

Fig. 73 illustrates the operation of the bell giving warning for switching movements. If a train should ap-

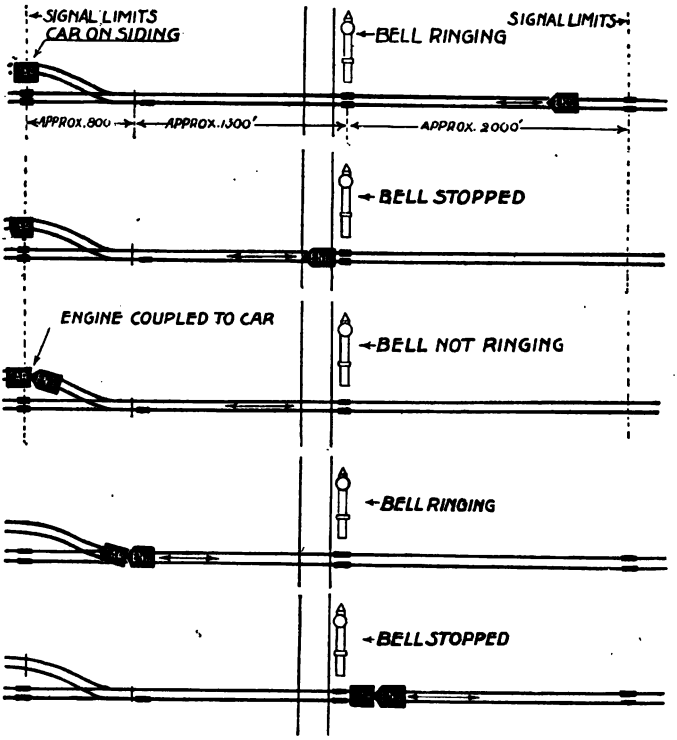

Fig. 73.

proach from the left at a time when an engine and cars are on the sidetrack, the bell would commence to ring at the insulated joint furthest to the left—that is, approximately 2100 feet from the crossing. If, however, there is no train approaching from that direction the bell is

Digitized by Google

rung from the switch by the train on entering the main line.

Fig. 74 illustrates a seven bell application, showing the methods employed where numerous bells have to ring from one track section, and where the distance between two bells is too short to give sufficient warning, making it necessary to use the overlapping system.

Many of these complicated installations, where numerous crossings are crowded into short distances, have been made by the Railroad Supply Company on large railroads, among which are many on the C., M. & St. P. R. R., the A., T.

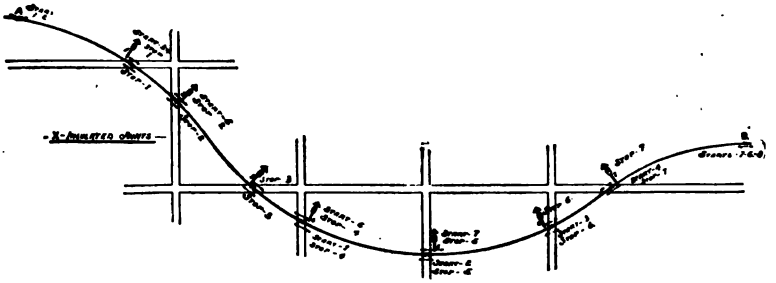

Showing operation of seven Chicago Crossing Signals installed on a grade at seven consecutive crossings.

Fig. 74.

& S. F., the C. V. R. R., the Plant System, the B. & O. S. W. R. R. and numerous other large trunk lines.

The expenses of installation and maintenance, where numerous signals are located close together, as shown in Fig. 74, are generally less than if the same number of signals were installed at isolated crossings.

Digitized by Google

THE ONLY PERFECT HIGHWAY CROSSING ALARM

The CHICAGO CROSSING ALARM

ALWAYS ON DUTY

This Watchman Never Sleeps

Economical in First Cost and to Maintain

No More Highway Crossing Accidents

No More Personal Injury Claims

Send for Catalogue

THE RRS

The RAILROAD SUPPLY CO.

THE RRS

CHICAGO *and* NEW YORK

Digitized by Google

AUTOMATIC ELECTRIC BLOCK SIGNALS

Automatic Block Signaling for single or double track lines and for the protection of curves, tunnels and all dangerous points.

THE RRS

THE RAILROAD SUPPLY CO.

CHICAGO
NEW YORK

Digitized by Google

THE HALL SIGNAL COMPANY

SPECIALIST IN
AUTOMATIC BLOCK SIGNALS

Manufacturer of and Contractor for the Application of...
THE HALL SYSTEMS OF AUTOMATIC ELECTRIC BLOCK SIGNALS FOR RAILWAYS.
SEMAPHORES and ENCLOSED DISKS.
NORMAL DANGER AND NORMAL SAFETY SYSTEMS.

SOLE OWNER OF UNITED STATES LETTERS PATENTS
COVERING ALL KNOWN PRACTICABLE METHODS OF OPERATING AUTOMATIC BLOCK SIGNALS CONTROLLED BY TRACK CIRCUITS ON THE NORMAL DANGER PLAN.

THE HALL SIGNAL COMPANY

25 BROAD STREET, NEW YORK

25 rue d'Edimbourg, Brussels
28 Victoria St., London.

MONADNOCK BLOCK
CHICAGO

Digitized by Google

THE Baltimore & Ohio Railroad Company is now installing the Hall System of Automatic Electric Semaphore Signals IN PLACE OF THE MANUAL BLOCK SYSTEM on its main line from Philadelphia to Baltimore, resulting in shorter blocks, increased capacity of road, better protection, and lower cost of operation . . . . The Lehigh Valley Railroad Company, beginning with a trial application covering ten miles of double track in 1894 has just completed the equipment of its entire main line from Jersey City to Buffalo, a distance of 440 miles with the Hall System of Automatic Electric Normal Danger Block Signals. This is the most extended application of Automatic Electric Signals in the world. . . . . .

83% OF ALL AUTOMATIC ELECTRIC BLOCK SIGNALS INSTALLED ON AMERICAN RAILWAYS FROM 1890 TO 1900 WERE HALL SIGNALS, MANUFACTURED AND INSTALLED BY THE . . . . . .

HALL SIGNAL COMPANY

NEW YORK
CHICAGO

LONDON
BRUSSELS

Digitized by Google

A REVOLUTION IN AUTOMATIC SEMAPHORE SIGNALING!

THE HALL SIGNAL COMPANY

Now offers to railroad companies an entirely new automatic Semaphore Signal operated by liquid gas and controlled by electricity.

This Signal represents a revolution in the art of automatic signaling on railroads, and when all its merits are generally known it will doubtless commend itself for general adoption. As a result of a series of practical tests covering a period of several months the following claims are confidently made for the new device:

First.—It is the simplest independent power Automatic Semaphore Signal in existence.

Second.—It is consequently less liable to derangement than any other Signal of its class.

Third.—It is the most economical Signal of its class to maintain, both for labor and material.

Fourth.—It is absolutely frost proof, as the gas employed for its operation will not be affected by natural temperatures.

Fifth.—It can be used in connection with any system of circuits.

Sixth.—It can be furnished to be forced to danger as well as to be forced to safety, if desired.

Seventh.—It is the most substantially built and consequently will prove to possess more life in service than any independent power signal in the market to-day.

The Hall Signal Company is now prepared to furnish this Signal to railroad companies at a reasonable price, and to guarantee it to be fully as represented. As the Hall Signal Company is the sole owner of this remarkably valuable contribution to the signaling art, and as consequently the United States Letters Patent applied for will undoubtedly be of the broadest possible character, all intending purchasers are hereby warned to respect the Hall Signal Company's rights in the same.

THE HALL SIGNAL COMPANY

NEW YORK CHICAGO LONDON BRUSSELS

Digitized by Google

LIST OF RAILWAY COMPANIES USING THE HALL SIGNAL COMPANY'S SYSTEMS OF AUTOMATIC ELECTRIC BLOCK SIGNALS

Atchison, Topeka & Santa Fe.

Boston & Albany.
Baltimore & Ohio.
Boston & Maine.
Belgium.

Canadian Pacific.
Central Vermont.
Chicago, Rock Island & Pacific.
Chicago & North Western.
Cincinnati, Hamilton & Dayton.
Chicago, Milwaukee & St. Paul.
Chicago & Eastern Illinois.
C. B. E. & O. Street Railway.
C. & N. Y. Traction Co.
City Ry., Madisonville.
Chic., St. Paul, Minn. & Omaha.
Columbus, Sandusky & Hocking.
Chic., New Orleans & Tex. Pac.
Chicago & Alton.

Delaware & Hudson.
Delaware, Lackawanna & West.
D. & W. T.

Erie.
Erie & Wyoming Valley.

Fairmount Park Traction Co.

Grand Rapids & Indiana.
Grand Trunk.

Illinois Central.

Kan. City, Ft. Scott & Memphis.

Lehigh Valley.
Los Angeles Ter. Co.
Lake Shore & Michigan So.
Louisville & Nashville.

Met. Underground (France).
Michigan Central.
Midi (France).

New York, Chicago & St. Louis.
New Jersey & New York.
N. Y. Central & Hudson River.
N. Y., New Haven & Hartford.
Norfolk & Western.

Oregon Short Line.

Philadelphia & Reading.
Paris, Lyons & Med. (France).

Staten Island Rapid Transit.
Sidney & Louisberg.
Southern.
Switch Back, Mauch Chunk.
Southern Pacific.
St. Louis, Keokuk & No. West.

Union Pacific.

THE HALL SIGNAL COMPANY

NEW YORK
CHICAGO
LONDON
BRUSSELS

Digitized by Google

Taylor Signal Company

Main Office and Works, - **Buffalo, N. Y.**

Western Office, **Monadnock Block, Chicago**

Manufacturers of the

TAYLOR ELECTRIC INTERLOCKING SYSTEM

Every Railway Official interested in securing the very best system of interlocking for his line should carefully read and investigate the following claims made for the Taylor System.

Some of the advantages possessed by the Taylor System over *mechanical* systems of interlocking are as follows:

1.—It is absolutely unaffected by changes in temperature whereas failure to promptly adjust mechanical connections to suit a sudden rise or fall of temperature may result in giving drooping signals, which are likely to be mistaken for clear signals.

2.—The breaking of any of the essential connections in the Taylor System can at worst only prevent the clearing of a signal; similar breakage of connections in a mechanical system may cause the false display of a clear signal.

3.—In a mechanical system of interlocking, no derail, switch, movable point frog or bars at a distance of 900 feet or over from the tower should be operated. For safety, the English Board of Trade regulations limit the distance at which trailing point switches can be worked to 900 feet, and in the case of facing points, this distance is restricted to 540 feet. Even at these distances, the dangers incident to breakage of pipe have led the London and North Western and a number of other English Railways to adopt an expensive steel channel section instead of pipe.

With the Taylor System any derail, switch, movable point frog or bar can be as quickly and as safely operated at a distance of a mile as at a distance of a foot from the tower. In consequence, at many places where two or more mechanical plants would be required, a single Taylor plant can be installed, thus effecting a great saving in cost of operation.

Digitized by Google

4.—At busy points where from three to six eight hour men would have to be employed for the operation of a mechanical plant, two twelve hour men will suffice for the operation of a Taylor plant.

5.—At many points, such as at stations, in yards or where there are street crossings, it is frequently very desirable to avoid running the many pipe and wire lines required in a mechanical plant; where the Taylor System is employed, all the leadout wires from a tower having the equivalent of 200 mechanical levers, can be contained in a conduit having a cross section 6 inches by 6 inches as against a width of approximately 83 feet for a similar mechanical plant.

6.—Where a mechanical plant is employed, any considerable change in alignment or grade of tracks practically necessitates the rebuilding of the plant at great cost, whereas similar changes made where a Taylor plant is in use will require practically no expenditure to make the interlocking suit the new conditions.

7.—Where mechanical signals are used it is always difficult and expensive to suitably work them in conjunction with a system of automatic electric block signals; whereas, the Taylor signals being purely electric, can, without change or added cost be employed as interlocked signals under track circuit control, thus naturally forming a part of the automatic block system.

8.—Owing to the fact that in the Taylor System there are no moving parts between interlocking machine and switches and signals controlled by it, and owing to the further fact that well insulated wires enclosed in a suitable conduit above ground, will far outlast the iron pipes and wires of a mechanical system, the cost of maintenance of a Taylor plant is far less than of a mechanical.

Some of the advantages possessed by the Taylor System over *other power* systems of interlocking are as follows:

1.—The Taylor System has the only perfect method of indication, in that the indication is given instantaneously when and only when a switch has completed its movement and is properly locked. Crosses, whether temporary or permanent, between indication wires and any other wire or wires of the Taylor System cannot produce a false indication such as can occur in other systems employing electro-magnetic indications; nor does it require a period of time varying from two to twenty seconds for the indication to be given, as in systems employing other means of indication, for when a switch has made its proper movement and is locked in its proper position, the indication is given instantly whether the switch be distant only one foot or a mile from the interlocking machine.

Digitized by Google

2.—The Taylor is the only power system that can be satisfactorily employed for the operation of plants having a small number of switches and signals. The Taylor System is in satisfactory service where as few as six working levers are employed, and is perfectly adapted for use at all junctions, crossings, drawbridges, tunnels, stations, yards, passing sidings, etc., where the distances between extreme switches or signals are greater than can be safely or satisfactorily covered with a mechanical plant, even though there be only a very few signals and switches to be operated.

3.—The cost of producing power for the Taylor System will rarely or never exceed one per cent. of the cost in any other power system. For example, if in a system using compressed air for operating switches and signals, the cost of coal and services of men employed in running power plant is $400.00 monthly, the total cost of producing power for a Taylor plant doing precisely the same work will not exceed four dollars monthly. Many times more electric current is consumed in certain power plants for valve control and indication purposes only, than is used for both operation and indication in a Taylor System.

4.—The cost of maintenance and renewals in a Taylor plant will be only a very small percentage of the cost of maintenance and renewals in any other power plant. This can be readily understood from the fact that more feet of electric conductor are employed in certain power plants than would be used in a Taylor, and in addition there are all the pneumatic pipes; in other power plants, more feet of iron pipe are used than feet of small electric conductors in a Taylor System, and anyone having experience with the rapid deterioration of iron pipes placed in the soils found about railways will have no difficulty in understanding how much shorter lived these underground pipes will be than well insulated copper wires placed in a suitable conduit above ground. Nor will it be difficult to understand how much more costly it will be to make repairs to such pipes placed several feet underground than it will be to repair a break or a leak in an above ground electric wire.

5.—The Taylor System is absolutely unaffected by change in temperature; other power systems sometimes experience very serious troubles during extreme cold weather.

TAYLOR SIGNAL COMPANY

Main Office and Works, **- BUFFALO, N. Y.**

Western Office, **Monadnock Block, CHICAGO**

Digitized by Google

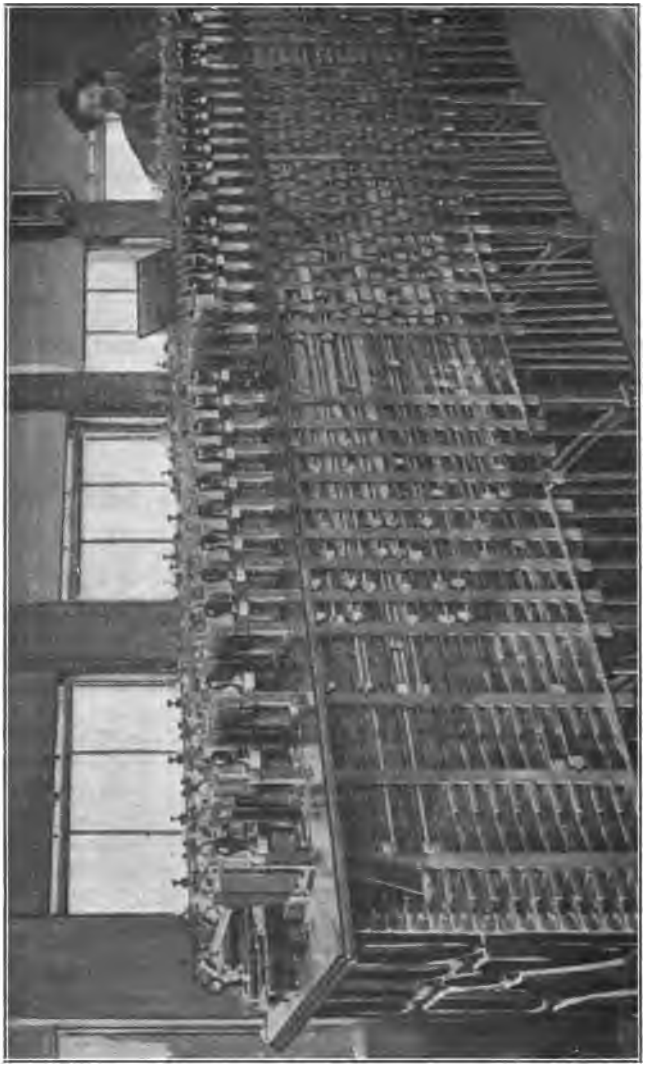

THE PNEUMATIC RAILWAY SIGNAL COMPANY'S LOW-PRESSURE PNEUMATIC INTERLOCKING MACHINE.

Digitized by Google

The Low Pressure Pneumatic Interlocking Signal System

is the cheapest to maintain, easiest to operate, and safer than any system of power signaling in the world.

In use on the New York Central & Hudson River, Erie, Philadelphia & Reading, Long Island, Chicago & Western Indiana and other railroads.

1,000 Levers Under Contract on One English Railway

In the Grand Central Yard, New York City, there are 135 signals, 121 switches with 135 working levers and 16,000 lever movements per day.

Labor cost, maintenance and cost of material for maintenance one-half that of any plant of this size, equipped with any other system.

Experience of three winters at Buffalo has demonstrated, beyond any shadow of a doubt, that low pressure air ***does not freeze.***

Barring snow between stock rail and switch points, the system works equally well in winter or summer.

PNEUMATIC RAILWAY SIGNAL CO.

Beckley Building, Rochester, N. Y., U. S. A.

Digitized by Google

STANDARD SIGNAL CO.

Main Office and Works
TROY, N. Y.

NEW YORK
36 Wall Street

CHICAGO
1032 Monadnock

Low Pressure
Pneumatic Interlocking

Mechanical Interlocking

Block Signaling

EVERYTHING IN ABOVE LINES
OR RELATING TO SAME

Every Railroad Officer should examine the operation of our Pneumatic Interlocking Machines

See the 175 Lever Low Pressure Pneumatic Machine at Grand Central Station, New York City

Digitized by Google

BLOCK SIGNALING

Safety and Increased Traffic Capacity

Recent installation on a prominent line increased the traffic capacity 50 per cent.

Controlled Manual Block Systems

The Union Lock and Block System

FOR SINGLE AND DOUBLE TRACK

The Union High Speed Train Staff

COMPLETE PROTECTION FOR SINGLE TRACK

The Union Switch and Signal Co.

General Office and Works

SWISSVALE, PA.

Havemeyer Building
NEW YORK

Monadnock Building
CHICAGO

Wentworth Building
BOSTON

Digitized by Google

AUTOMATIC BLOCK SYSTEM

ELECTRIC SIGNALS
SEMAPHORE AND DISC

Wireless or Polarized Track Circuits

Westinghouse Electro-Pneumatic System

Track Circuit System
FOR ELECTRIC RAILWAYS

The Union Switch and Signal Co.

General Office and Works

SWISSVALE, PA.

Havemeyer Building
NEW YORK

Monadnock Building
CHICAGO

Wentworth Building
BOSTON

Digitized by Google

INTERLOCKING

Terminals
Junctions
Draw Bridges
Grade Crossings

The Westinghouse Electro-Pneumatic

THE IDEAL POWER SYSTEM
FOR LARGE INSTALLATIONS

Frogs, Switches, Slips,
Switch Stands, Etc.
Highway Crossing Signals

The Union Switch and Signal Co.

General Office and Works
SWISSVALE, PA.

Havemeyer Building
NEW YORK

Monadnock Building
CHICAGO

Wentworth Building
BOSTON

Digitized by Google

RAILROADS

SUPPLIED

IMMEDIATELY

WITH

ELECTRICAL MATERIAL

FOR

Telegraph
Telephone and
Signal Systems

Batteries, Bells, Wires, Telegraph Instruments, and Supplies of all Kinds

SHIPMENTS DIRECT FROM STOCK

Central Electric Company,

ELECTRICAL SUPPLIES

264-266-268-270 Fifth Avenue, Chicago

Digitized by Google

TRADE MARK.

THE BEST WIRE is none too good for use with the Block System or anywhere else that GOOD insulation is required. For wearing qualities OKONITE HAS NO EQUAL, the insulation being far superior to any other. . . . . IT IS MADE TO LAST.

Central Electric Company,

GENERAL WESTERN AGENTS

264-266-268-270 Fifth Avenue, Chicago

Digitized by Google

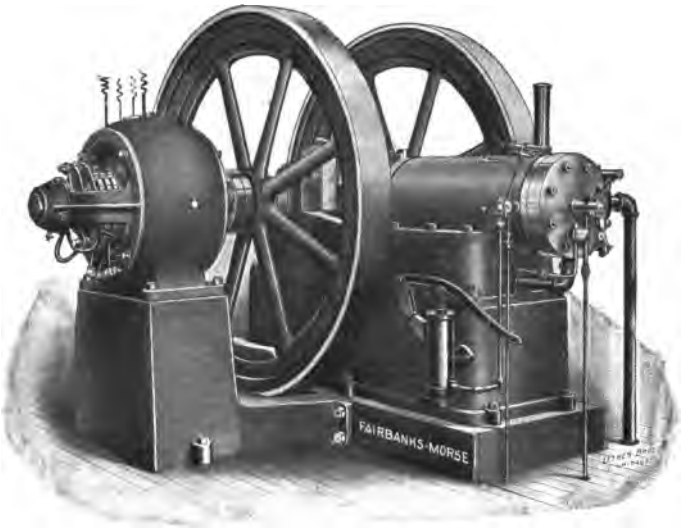

SPECIAL ELECTRIC LIGHTING ENGINE.

THE BEST FOR SMALL OR LARGE ELECTRIC LIGHTING PLANTS BECAUSE:

They give a perfectly steady light
Require little attention
Are no expense except when actually furnishing lights

GASOLINE ENGINES FOR ALL PURPOSES

WE BUILD

COALING STATIONS, WATER STATIONS, MACHINERY FOR OPERATING TURNTABLES, BALLAST LOADERS, CONCRETE MIXERS.

FAIRBANKS, MORSE & CO.

Chicago	Cincinnati	Omaha	San Francisco
Detroit	Louisville	St. Louis	Los Angeles
Indianapolis	St. Paul	Kansas City	Portland, Ore.
Cleveland	Minneapolis	Denver	Salt Lake City

Digitized by Google

GASOLINE AIR COMPRESSOR—SIZES 12 TO 34 H. P

COMPACT, ECONOMICAL —RELIABLE—

It's an ideal outfit wherever compressed air is used —for signal work, pneumatic tools, spraying and painting, air lifts, etc. Can be mounted on flat car, if portable outfit desired, or set on permanent foundations in shops. Write us for further particulars. . . . . .

Reliable Railway Supplies

HAND CARS, PUSH CARS, VELOCIPEDES, MOTOR CARS, RAIL BENDERS, TRACK JACKS, TRACK TOOLS, CATTLE GUARDS, TANKS AND FIXTURES.

FAIRBANKS, MORSE & CO.

Chicago	Cincinnati	Omaha	San Francisco
Detroit	Louisville	St. Louis	Los Angeles
Indianapolis	St. Paul	Kansas City	Portland, Ore.
Cleveland	Minneapolis	Denver	Salt Lake City

Digitized by Google

Edison Primary Batteries

Formerly Known as EDISON-LALANDE

"TYPE SS"

LEADS THEM ALL

STANDS THE COLD WEATHER

In a comparative battery test made by the Union Switch and Signal Co. during last winter, in which **ALL MAKES** of Caustic Soda Batteries on the market **WERE SUBJECTED TO THE SAME CONDITIONS, the EDISON-LALANDE BATTERY TYPE SS WAS THE ONLY BATTERY THAT DID NOT FAIL IN THE EXTREME COLD WEATHER,** but continued to work the signal without interruption until the charge was entirely exhausted.

Write for Catalogue No. 42

EDISON MANUFACTURING CO.

Factory, Orange, New Jersey, U. S. A.

New York Office, 185 Fifth Avenue. Chicago Office, 144 Wabash Avenue.
Foreign Department, 15 Cedar Street, New York.

BAIRD'S SIGNAL GLASS

Nels Signal YELLOW (Patented Jan. 22, 1901) **Nels Signal RED** (Solid)

Nels Signal GREEN

Nels Signal PURPLE **Nels Signal BLUE**

Baird's Nels signal glasses are of perfect and uniform color. Baird's Nels red is the only glass that is red clear through. Baird's Nels yellow is the product of exhaustive experiments made on the New York, New Haven & Hartford, and is the standard signal glass on that road. Has been in general use for several years and gives perfect satisfaction. . . It is

THE ORIGINAL DISTINCTIVE DISTANT SIGNAL

JOHN C. BAIRD

83 FRANKLIN STREET, BOSTON, MASS.

Digitized by Google

Digitized by Google

Digitized by Google

Digitized by Google

Digitized by Google

This book should be returned to the Library on or before the last date stamped below.

A fine of five cents a day is incurred by retaining it beyond the specified time.

Please return promptly.

DUE APR 2 1928

APR - 8 1938

DUE MAY -9 '38

DUE FEB 20 '39

DUE OCT 21 '40

DUE JAN 23 '45

DUE MAR -9 '46

CANCELLED JAN 8 1974

JAN 7 '74 H

Digitized by Google

Eng 839.01.7
The block system of signaling on Am
Cabot Science 003803699
3 2044 092 017 680

Digitized by Google